beyma

PROFESSIONAL LOUDSPEAKERS

www.beyma.com

CM-6

MID FREQUENCY TRANSDUCER

KEY FEATURES

- 160W program power.
- 90,7 dB, 2,83V @ 1m sensitivity.
- Foam flat surround.
- Smooth and flat response for accurate mid-frequency reproduction.
- Suited for midrange applications.
- Steel basket.
- Ferrite magnet.

TECHNICAL SPECIFICATIONS

Nominal diameter	165 mm	6,5 in
Rated impedance		8 Ω
Minimum impedance		7,5 Ω
Power capacity*		80 W_{RMS}
Program power		160 W
Sensitivity	90,7 dB	2.83v @ 1m @ 2π
Frequency range		150 - 6.000 Hz
Recom. enclosure vol.	10 / 40 l	0,35 / 1,41 ft^3
Voice coil diameter	38,5 mm	1,5 in
Magnetic assembly weight	2 kg	4,40 lb
BL factor		8,1 N/A
Moving mass		0.014 kg
Voice coil length		7,5 mm
Air gap height		6 mm
X_{damage} (peak to peak)		20,7 mm

DIMENSION DRAWINGS

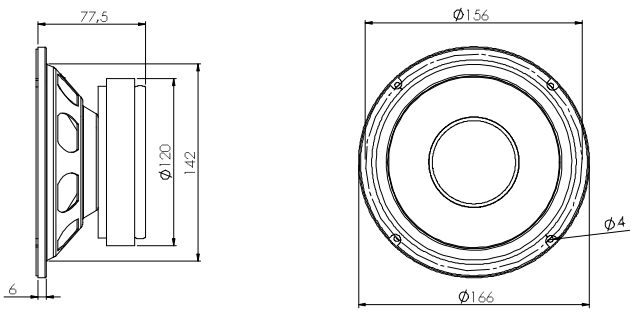

THIELE-SMALL PARAMETERS**

Resonant frequency, f_s	138 Hz
D.C. Voice coil resistance, R_e	6,0 Ω
Mechanical Quality Factor, Q_{ms}	4,74
Electrical Quality Factor, Q_{es}	1,16
Total Quality Factor, Q_{ts}	0,93
Equivalent Air Volume to C_{ms}, V_{as}	2,47 l
Mechanical Compliance, C_{ms}	90,2 μm / N
Mechanical Resistance, R_{ms}	2,69 kg / s
Efficiency, η_0	0,54 %
Effective Surface Area, S_d	0.014 m^2
Maximum Displacement, X_{max} * **	2,5 mm
Displacement Volume, V_d	14 cm^3
Voice Coil Inductance, L_e @ 1 kHz	0,6 mH

MOUNTING INFORMATION

Overall diameter	166 mm	6,54 in
Bolt circle diameter	156 mm	6,14 in
Baffle cutout diameter:		
- Front mount	142 mm	5,59 in
- Rear mount	152 mm	5,98 in
Depth	77,5 mm	3,05 in
Volume displaced by driver	0,75 l	0,03 ft^3
Net weight	2,16 kg	4,76 lb
Shipping weight	2,36 kg	5,2 lb

Notes:

* The power capaticty is determined according to AES2-1984 (r2003) standard. Program power is defined as the transducer's ability to handle normal music program material.

** T-S parameters are measured after an exercise period using a preconditioning power test. The measurements are carried out with a velocity-current laser transducer and will reflect the long term parameters (once the loudspeaker has been working for a short period of time).

*** The X_{max} is calculated as $(L_{vc} - H_{ag})/2 + (H_{ag}/3,5)$, where L_{vc} is the voice coil length and H_{ag} is the air gap height.

CM-6

MID FREQUENCY TRANSDUCER

FREE AIR IMPEDANCE CURVE

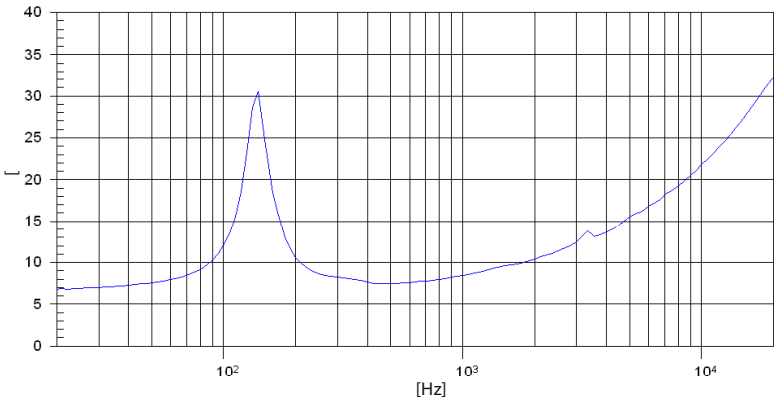

FREQUENCY RESPONSE AND DISTORTION

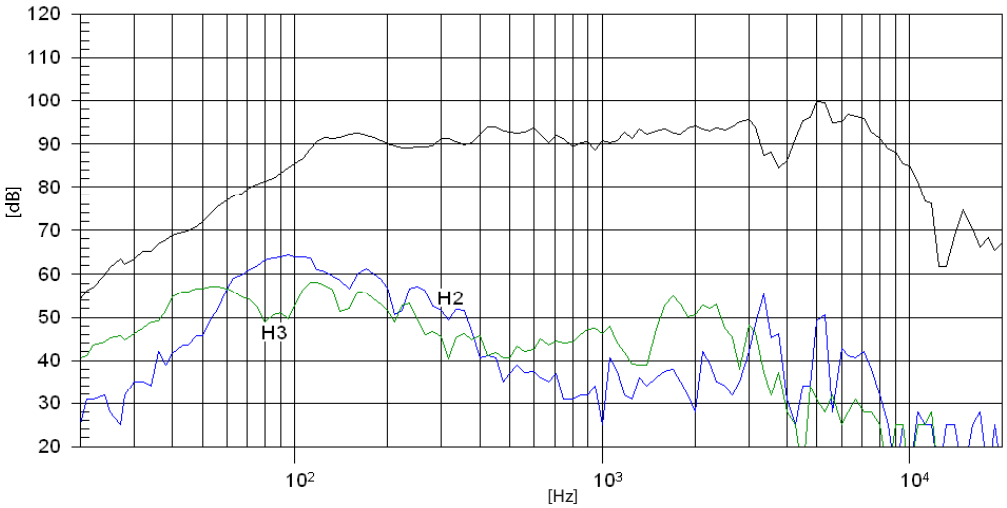

Note: On axis frequency response measured with loudspeaker standing on infinite baffle in anechoic chamber, 1W @ 1m