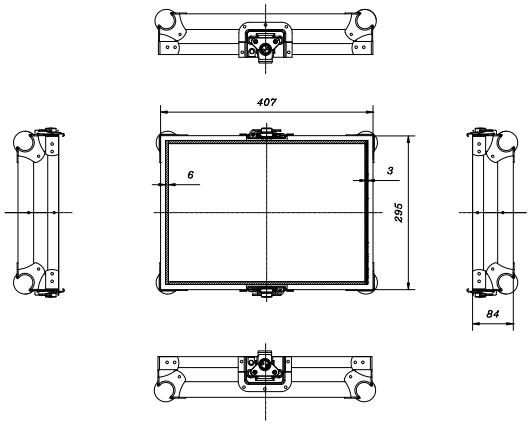

WALKASSE.COM	WM-10M GL		GL	GRILLE-AIR
	1:1	ESCALA / SCALE	DJ GEAR	
	mm	MEDIDA / UNIT	CDPLAYER / MIXER CASE	
	1/1	PAGINA / PAGE		

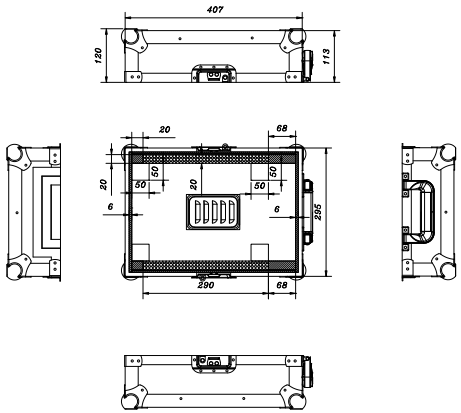

WALKASSE.COM	WM-10M GL		GL	GRILLE-AIR
	1:1	ESCALA / SCALE	DJ GEAR	
	mm	MEDIDA / UNIT	CDPLAYER / MIXER CASE	
	1/1	PAGINA / PAGE		

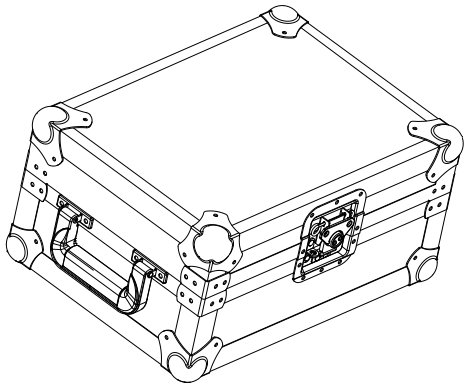

WALKASSE.COM	WM-10M GL		GL	GRILLE-AIR
	1:1	ESCALA / SCALE	DJ GEAR	
	mm	MEDIDA / UNIT	CDPLAYER / MIXER CASE	
	1/1	PAGINA / PAGE		

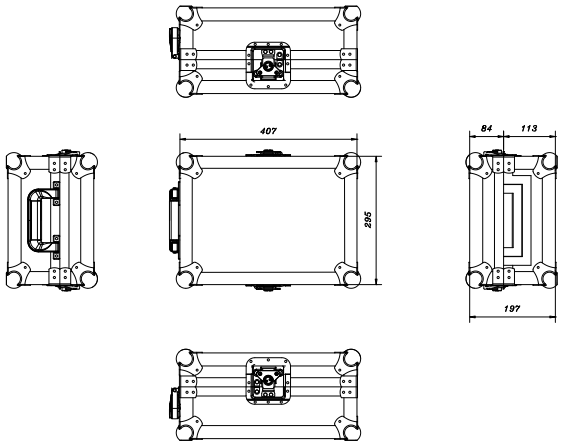

WALKASSE.COM	WM-10M GL		GL	GRILLE-AIR
	1:1	ESCALA / SCALE	DJ GEAR	
	mm	MEDIDA / UNIT	CDPLAYER / MIXER CASE	
	1/1	PAGINA / PAGE		