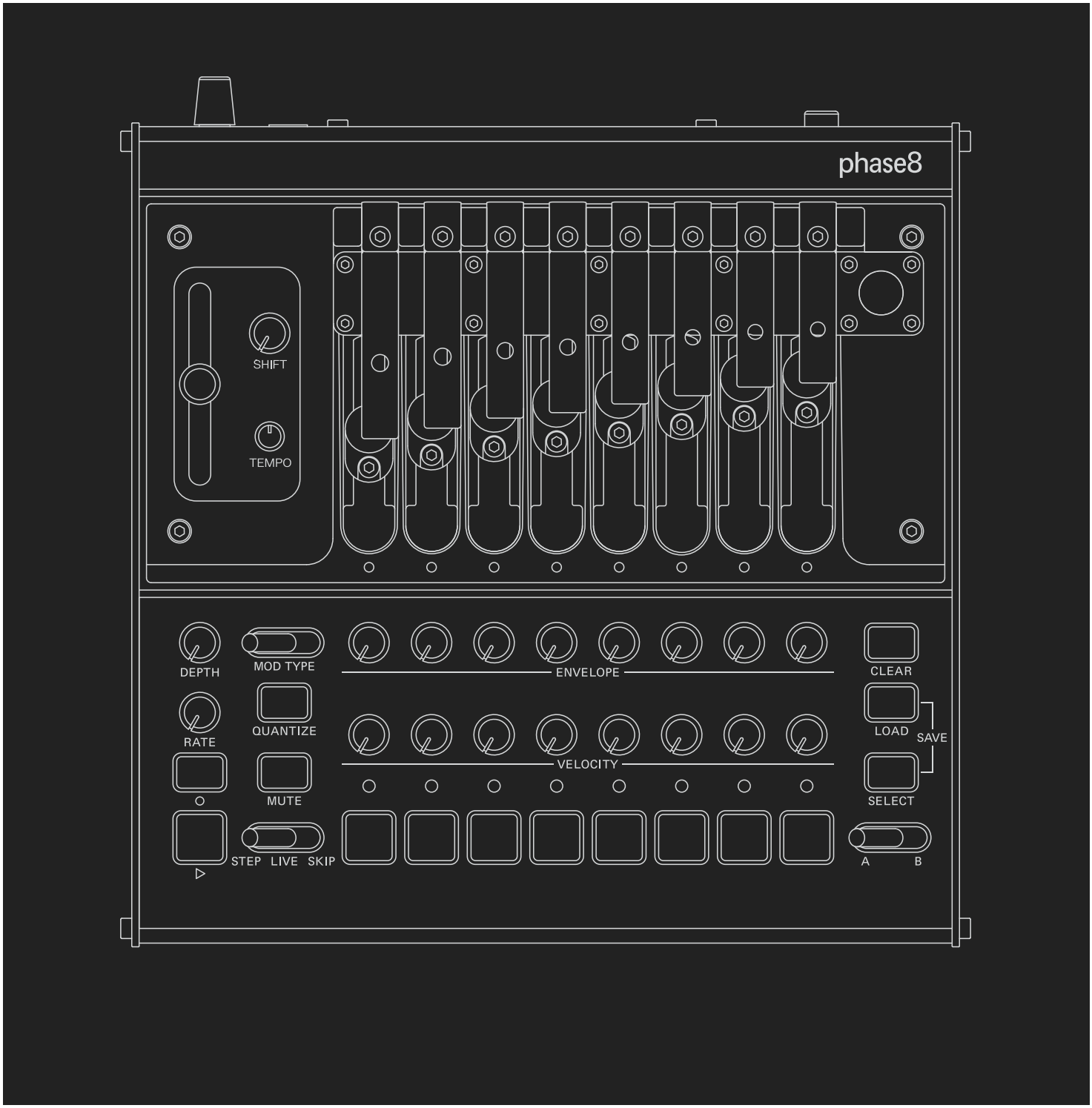

phase8

Acoustic Synthesizer
Manual

Version 03
2026/09/01

27pgs
A4

Notes:
P23 - Parameter correction for index items 22 and 23

KORG

0.0 Index

1.0 Introduction
- 1.1 What is Acoustic Synthesis? P04

2.0 In the Box
- 2.1 phase8 P05
- 2.2 Accessories P05
- 2.3 Resonators P05
- 2.4 Product Carbon Footprint P06

3.0 Setup
- 3.1 Front Panel Controls P07
- 3.2 Rear Panel Connections P08
- 3.3 Powering ON P09
- 3.4 Powering OFF P09
- 3.5 Grounding P09
- 3.6 Software Update P09

4.0 Making Sounds
- 4.1 Keys P10
- 4.2 Air Slider P10
- 4.3 Hands & Objects P11
- 4.4 Velocity P12
- 4.5 Envelope P12
- 4.6 Modulation Effects P13

5.0 Using the Sequencer
- 5.1 Step Sequence Programming P14
- 5.2 Variation Switch P15
- 5.3 Key Record P15
- 5.4 Pluck Record P15
- 5.5 Parameter Record P15
- 5.6 Quantize P16
- 5.7 Mute P16
- 5.8 Shift P16
- 5.9 Skip P17
- 5.10 Clear All P17

6.0 Saving & Loading
- 6.1 Saving a Program P18
- 6.2 Loading a Program P18
- 6.3 Program Content P18

7.0 Resonators
- 7.1 Swapping P19
- 7.2 Tuning & Calibration P19

8.0 MIDI
- 8.1 MIDI Control: Device P20
- 8.2 MIDI Control: Computer P20
- 8.3 MIDI Settings P20
- 8.4 MIDI Note Assignment P21
- 8.5 MIDI Filter Settings P21

9.0 Synchronising
- 9.1 phase8 Sequencer P22
- 9.2 Devices to phase8 P22

10.0 Global Parameter Settings
- 10.1 Global Parameter Table P23/24

11.0 End of Life: Recycling
- 11.1 Electronics Recycling P25
- 11.2 Cardboard Recycling P25

12.0 MIDI Implementation Chart P26

13.0 Third-Party Licenses
- 13.1 Disclaimer P27
- 13.2 PFFFT (Pretty Fast FFT) P27

1.0 Introduction

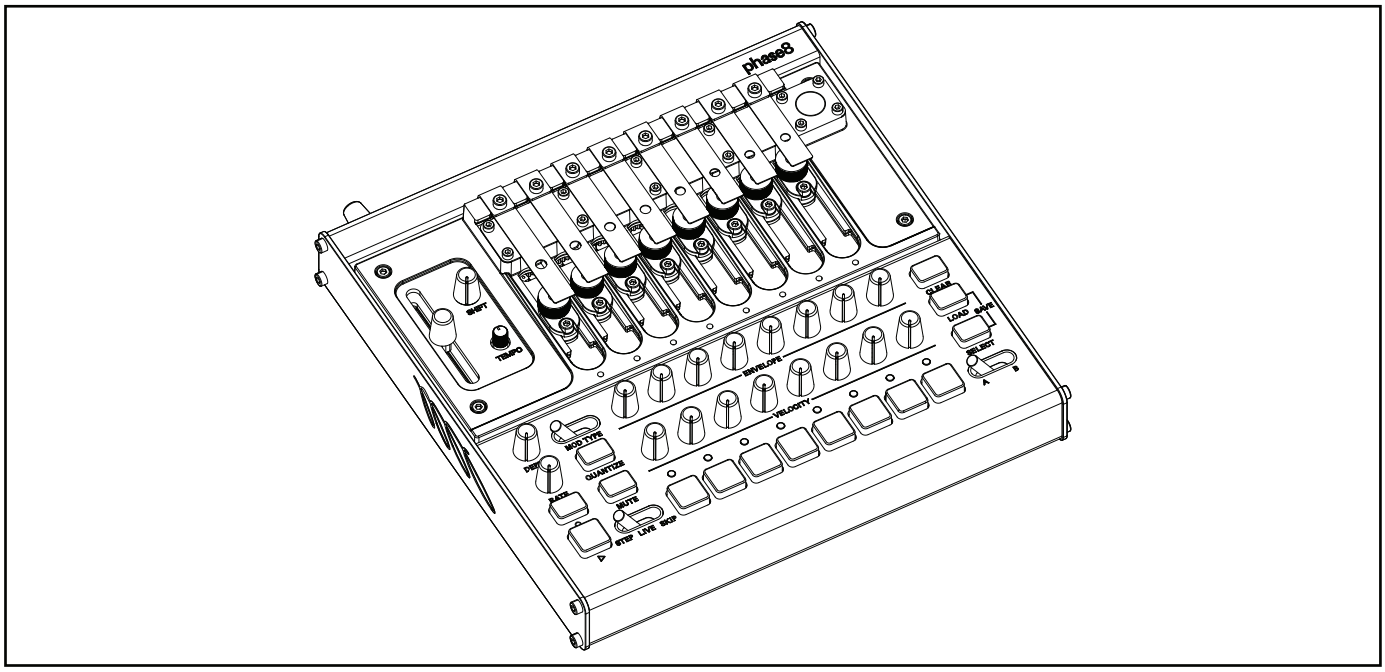

1.1 What is Acoustic Synthesis?

Acoustic Synthesis was born from a desire to step beyond circuits, knobs, faders and switches, beyond the sealed world of electronics. It is a return to sound as a physical act. It asks a simple question: what if a synthesizer did not only simulate sound, but contained it? An instrument that works with the rawness of acoustics, – physically vibrating bodies – and harnesses this with precise electronic control. Through this, Acoustic Synthesis can create instruments that act and feel alive, responding to the world around you.

phase8 is the first expression of KORG's Acoustic Synthesis technology – an instrument where sound is not only generated, but embodied. Its name is a nod to the 7 research stages that came before it, finally cracked on the 8th go.

PHYSICALLY VIBRATING BODIES

At the heart of the sound are what we call resonators – sculpted, physically vibrating bodies precisely tuned to desired frequencies through listening as much as measurement.

When excited, they move in complex ways – twisting, bending, contorting. These micro-motions, almost invisible, give each resonator its own presence, temperament, and voice.

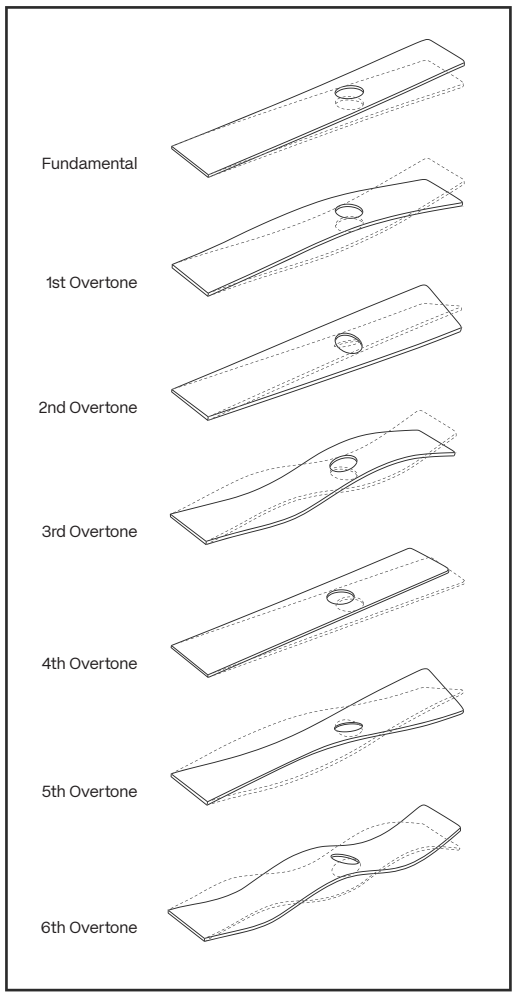

2.0 In the Box

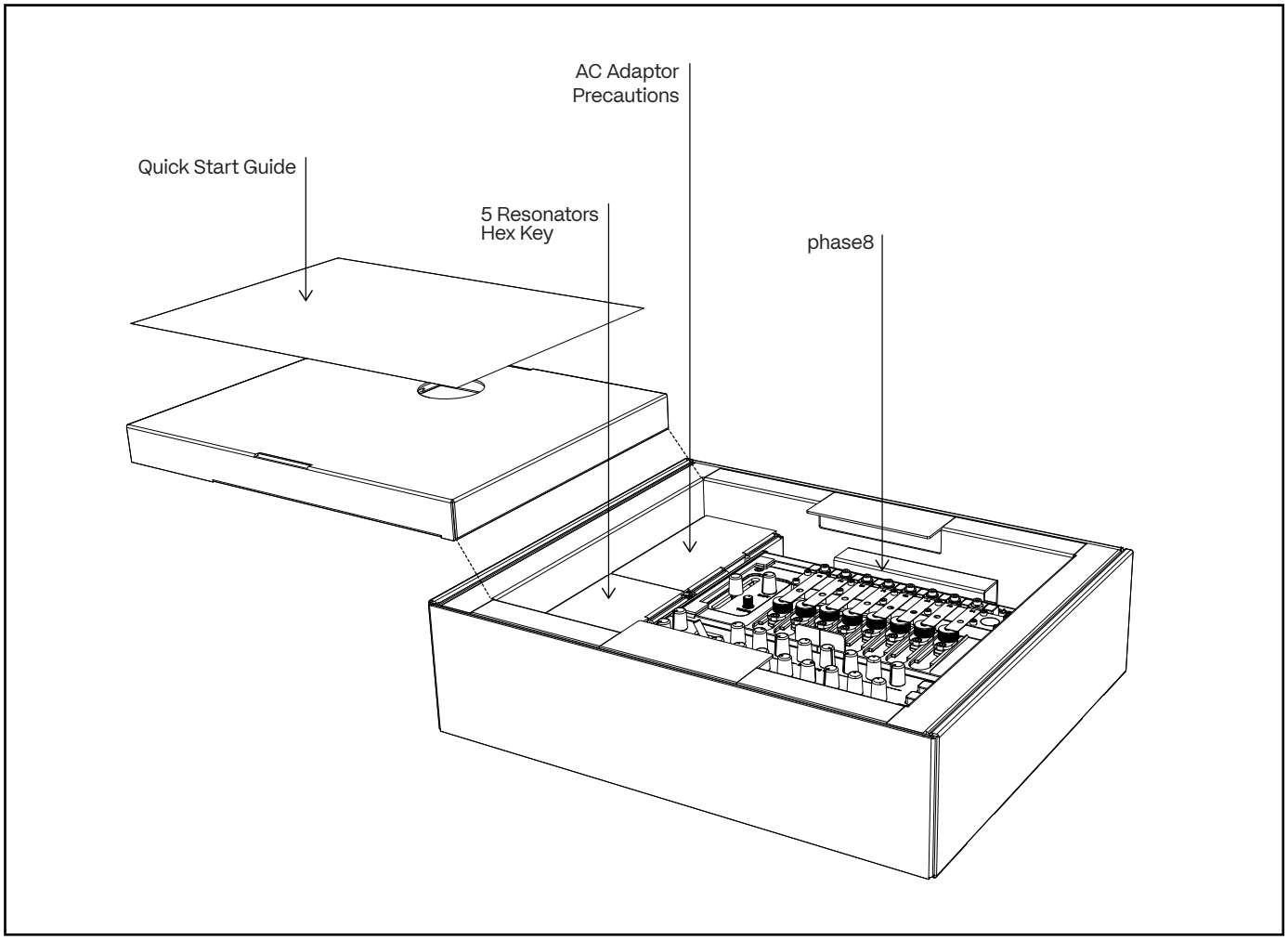

2.1 phase8

phase8 is an 8-voice acoustic synthesizer that merges the sonic richness of the physical world with precise electronic control.

Built around haptic sound generation through Acoustic Synthesis, it features swappable and tunable steel resonators, a polymetric rhythm sequencer, multiple modulation modes, trigger delay, parameter automation, real-time interaction, and external connectivity.

All of this and more can be discovered in this manual.

2.2 Accessories

The accessories you receive with your phase8 are:

- AC Adaptor
- Hex Key
- Quick Start Guide
- Precautions Sheet
- 5 Additional Resonators

2.3 Resonators

phase8 comes with 13 resonators tuned to different notes. Upon unboxing you will find 8 of these resonators installed on the instrument.

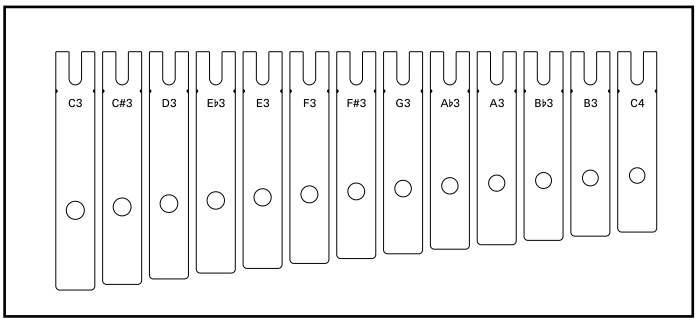

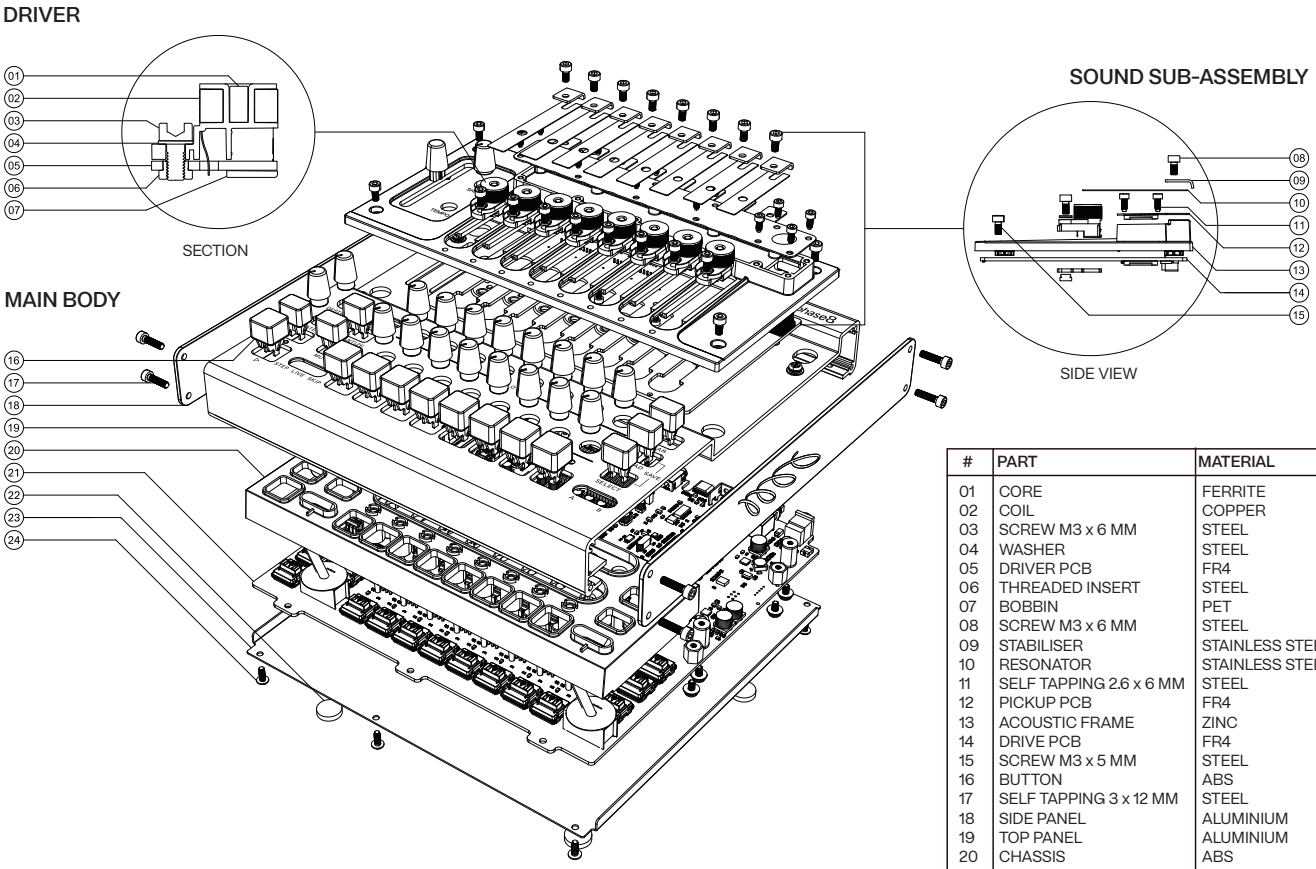

#	PART	MATERIAL
01	CORE	FERRITE
02	COIL	COPPER
03	SCREW M3 x 6 MM	STEEL
04	WASHER	STEEL
05	DRIVER PCB	FR4
06	THREADED INSERT	STEEL
07	BOBBIN	PET
08	SCREW M3 x 6 MM	STEEL
09	STABILISER	STAINLESS STEEL
10	RESONATOR	STAINLESS STEEL
11	SELF TAPPING 2.6 x 6 MM	STEEL
12	PICKUP PCB	FR4
13	ACOUSTIC FRAME	ZINC
14	DRIVE PCB	FR4
15	SCREW M3 x 5 MM	STEEL
16	BUTTON	ABS
17	SELF TAPPING 3 x 12 MM	STEEL
18	SIDE PANEL	ALUMINIUM
19	TOP PANEL	ALUMINIUM
20	CHASSIS	ABS
21	MAIN PCB	FR4
22	FEET	PU
23	BOTTOM COVER	STEEL
24	SELF TAPPING 3 x 8 MM	STEEL

2.4 Product Carbon Footprint (PCF)

The total carbon cost for the production of phase8 is 63.78 kg CO2e. This is inclusive of one phase8 instrument, all accessories, and packaging.

All material choices for phase8 were thoughtfully made to balance durability and recyclability where possible.

METHODOLOGY

This self-declared phase8 PCF was completed in collaboration with Ecochain using the Mobius Life Cycle Assessment (LCA) software.

Displayed here are the A1–A3 production emissions values, or what is called cradle-to-gate. This result includes raw material extraction, material processing, and manufacturing. It does not include distribution, use phase, or end-of-life.

The calculation of this model used factory data where known and emission factor data from Ecoinvent. Ecochain provided methodological guidance and reviewed the calculation for alignment with ISO 14067 requirements.

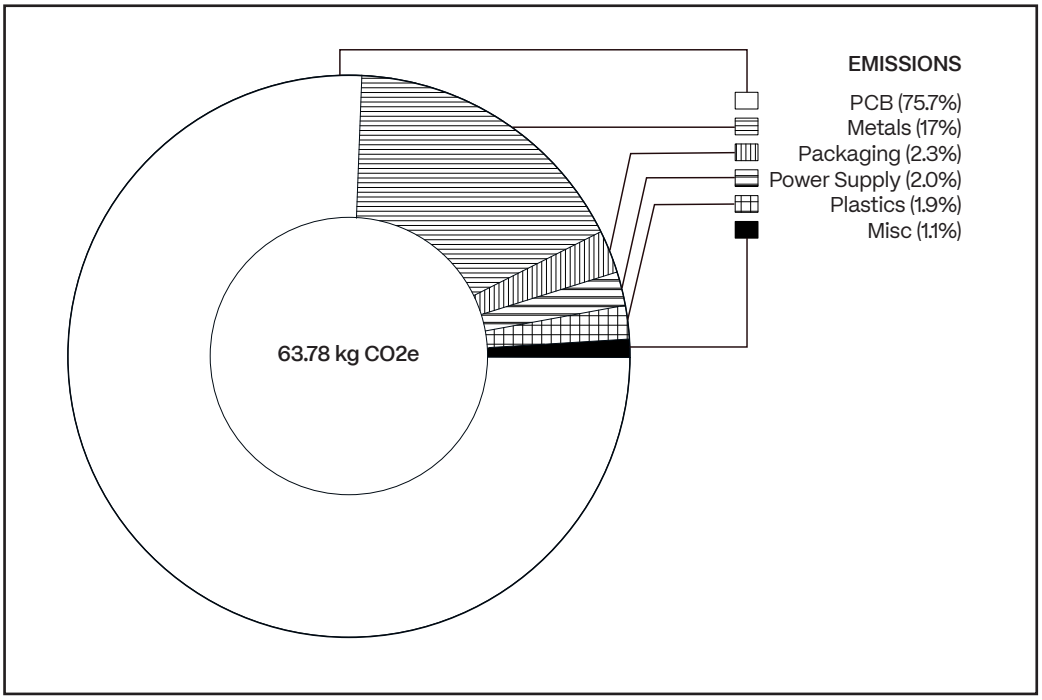

3.0 Setup

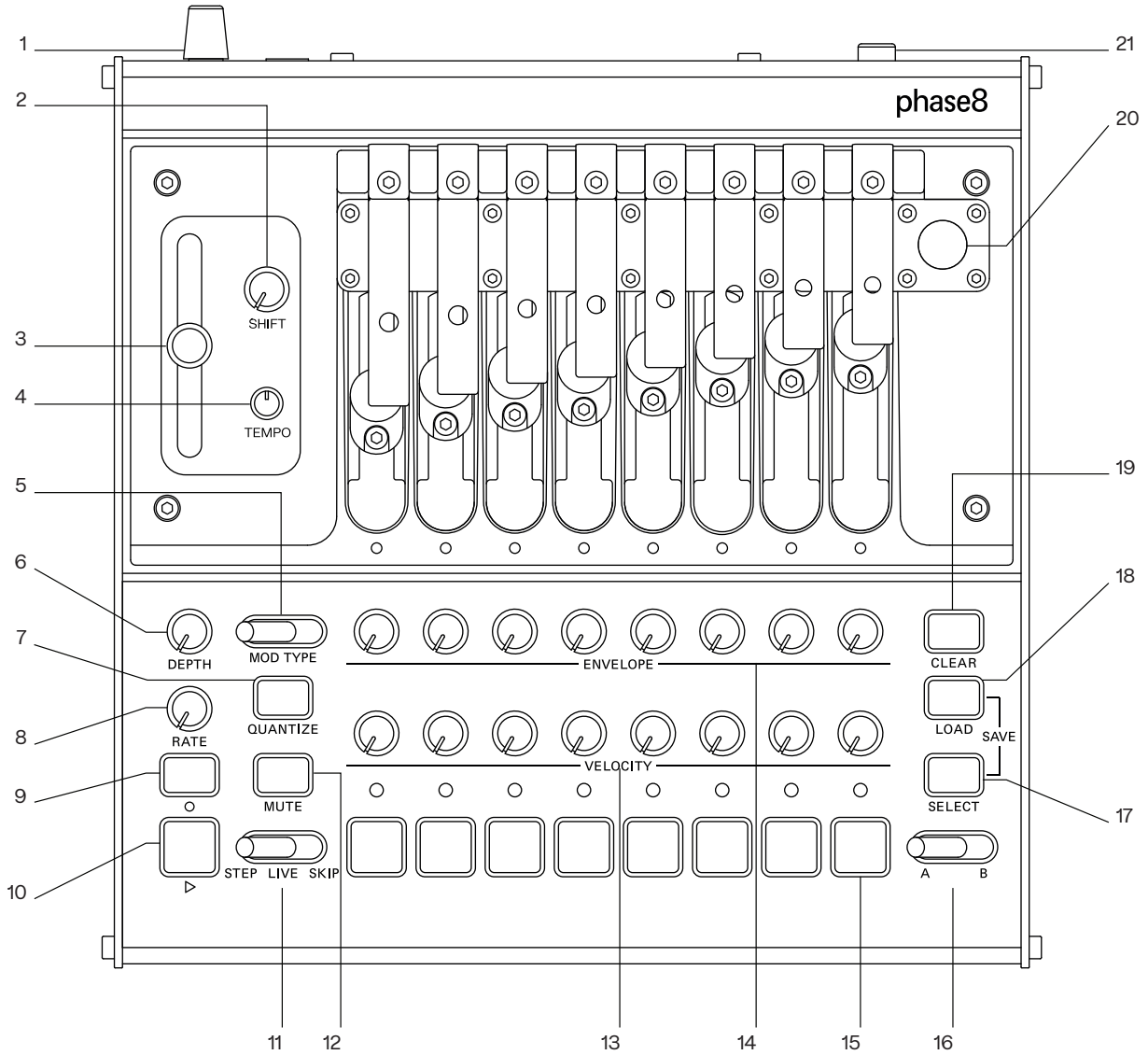

3.1 Front Panel Controls

1. VOLUME
Changes the output volume.

2. SHIFT
Adds delayed triggers to the sequence to provide rhythmic variation.

3. AIR
Sets the amount of raw pick-up signal which leaks out of the instrument alongside the controlled enveloped signals. All the way down results in a tighter sound, all the way up results in an airier sound which can feedback in loud rooms.

4. TEMPO
Sets the internal sequencer tempo.

5. MOD TYPE SWITCH
RIGHT: AM Polyphonic Modulation
CENTRE: AM Pitch Envelope / Vibrato
LEFT: Tremolo

6. DEPTH
Determines the intensity of the modulation mode set by the MOD TYPE SWITCH.

7. QUANTIZE
Hold this and press one of the 8 keys to quantize that voice's sequence to the nearest 16th note. Like MUTE, this setting can be toggled per voice.

8. RATE
Determines the rate or frequency of the modulation mode set by the MOD TYPE SWITCH.

9. RECORD
Hold RECORD while playing notes on the live keyboard or turning any knob on the device to record these events to the internal sequencer. A recorded parameter can be returned to its live knob setting by turning the knob.

10. START
Starts / stops the internal sequencer.

11. KEY MODE
Determines the function of the 8-key keyboard.
SKIP: Select which steps are skipped for the selected voice.
LIVE: Live keyboard for triggering voices.
STEP: 8 step sequencer – select which steps contain triggers for the selected voice.

12. MUTE
Hold this and press one of the 8 keys to toggle the sequencer mute for that voice.

13. VELOCITY
Determines how hard the resonators are hit.

14. ENVELOPE
Sets the envelope of the associated voice. The envelope ranges from a short plucky sound, to long sustained sounds as the knob is turned from left to right.

15. KEYS
These 8 keys can be voice triggers or step buttons.

16. VARIATION A/B SWITCH
Flip between two sequences, if you hold SAVE while flipping from A to B, the contents of A will be copied to B and vice versa. This can be useful for creating copies of the sequence so that it can be varied.

17. SELECT
Hold this and press one of the 8 keys to change the currently selected voice.

18. LOAD
Hold LOAD and press one of the 8 keys to load from one of 8 program slots. Hold SELECT while holding LOAD and press one of the 8 keys to save to one of 8 program slots.

19. CLEAR
Hold this and press one of the 8 keys to clear that voice's sequence. Hold SELECT and press CLEAR to clear all sequence data for the current sequence.

20. PLUCK
Touch-activated triggers that can be recorded into a sequence.

21. POWER
Hold to turn on/off the instrument.

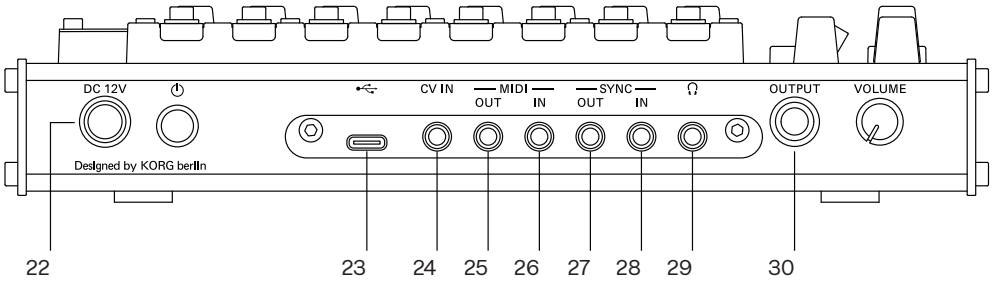

3.2 Rear Panel Connections

22. POWER SUPPLY
Please be sure to use the included AC adapter.

23. USB-C CONNECTOR
Connect this device to a computer to control the device over USB-MIDI, to use the device as a USB-MIDI controller, or to update phase8's software.

24. CV IN
Control voltage input – use an external +/-5V analog CV or audio signal to modulate various parameters.

25. MIDI OUT
TRS-A MIDI output, which sends MIDI Note messages when the resonators are triggered, as well as Control Change messages when the parameters are changed and MIDI Clock messages to sync an external device to phase8 sequencer's tempo.

26. MIDI IN
TRS-A MIDI input, which accepts MIDI Note messages to trigger the resonators, as well as Control Change messages to control the parameters and MIDI Clock messages to sync phase8's sequencer to an external source.

27. SYNC OUT
Sync Output sends a 2PPQN or 4PPQN clock signal to external devices indicating the tempo of phase8's sequencer.

28. SYNC IN
Sync Input sets the tempo of phase8's sequencer using an external 2PPQN or 4PPQN clock signal (like in other KORG products, such as the volca series and the logue series).

29. HEADPHONE OUT
Headphone output.

30. OUTPUT
Line-level mono output. Connect to earthed external equipment for minimal noise.

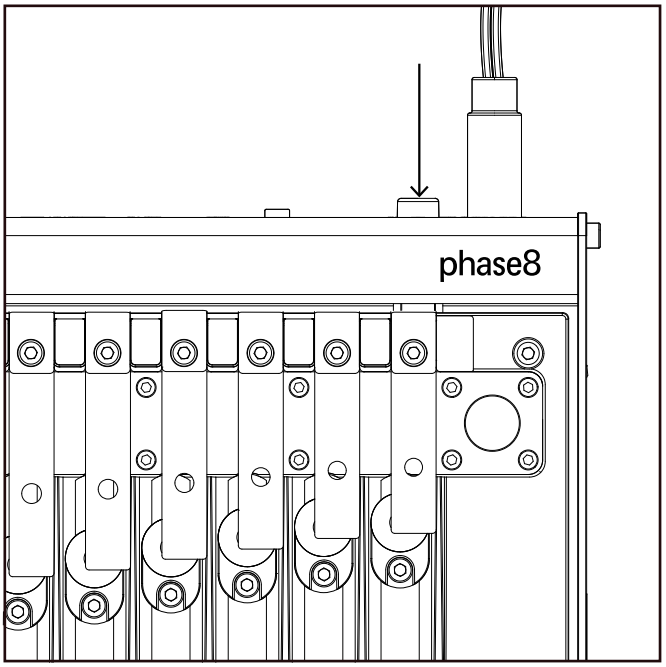

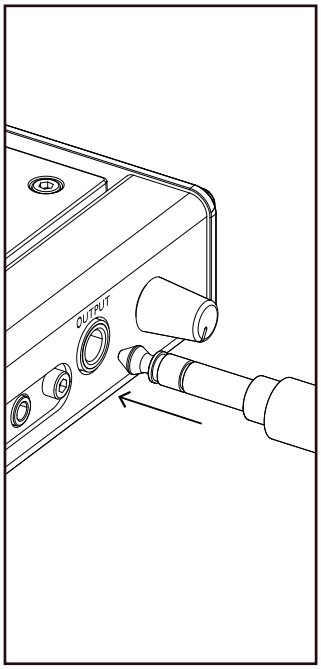

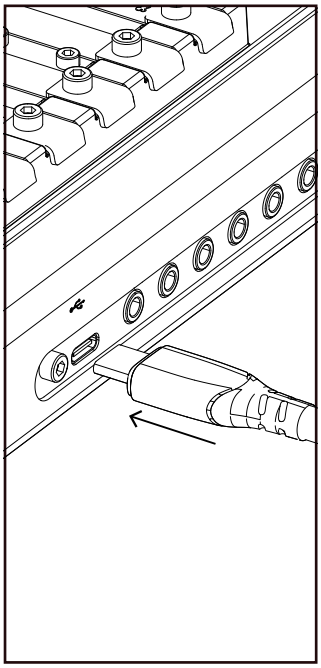

3.3 Powering ON

Connect the included AC adaptor to the DC 12V jack located on the rear panel. Use only the included AC adaptor, as using any other AC adaptor may cause malfunctions.

Hold the POWER button on the rear panel until the unit's LEDs light up, and then take your finger off the POWER button.

phase8 will self-calibrate upon start-up by default, this process improves phase8's performance with the currently installed resonators. This auto-calibration can be turned off if desired.

For an optimal calibration, do not touch the resonators or obstruct them with any objects while the unit is calibrating.

Calibration gathers information from the resonators which is used by phase8 when sustaining notes and for tuning the Amplitude Modulation (AM) effects.

Once calibration is completed, the TEMPO knob will start blinking to indicate the current tempo of the instrument, at this point phase8 is ready to use.

3.4 Powering OFF

Before turning phase8 off, ensure that the currently active program is saved if you would like to continue working with it later, otherwise it will be erased. Refer to section 6.0 for instructions on saving a program.

Hold the POWER button on the rear panel until all of the LEDs turn off and then remove your finger.

AUTO POWER OFF

phase8 features an Auto Power Off function that automatically turns phase8 off after 20 minutes of inactivity, including no interaction with knobs, switches, or buttons and no notes being triggered.

By default, the factory setting for Auto Power Off is enabled. The Auto Power Off can be disabled in the Global Parameters menu as described in section 10.0.

3.5 Grounding

Much like an electric guitar, phase8 can amplify noise and interference from the environment.

Connecting the main output to a properly earthed sound card or amplifier will reduce these effects significantly. The noise will be most obvious when the AIR slider is set to maximum; this is like connecting 8 condenser microphones with the gain turned up. Noise, feedback and other interactions with the world can happen here – embrace it!

3.6 Software Update

phase8's internal software can be updated to the current version by downloading the latest firmware updater for Windows or macOS online at korg.com and following the instructions on the app.

When connecting a phase8 to a PC over USB for software update, hold PLAY and RECORD while switching on phase8 to boot into software update mode.

4.0 Making Sounds

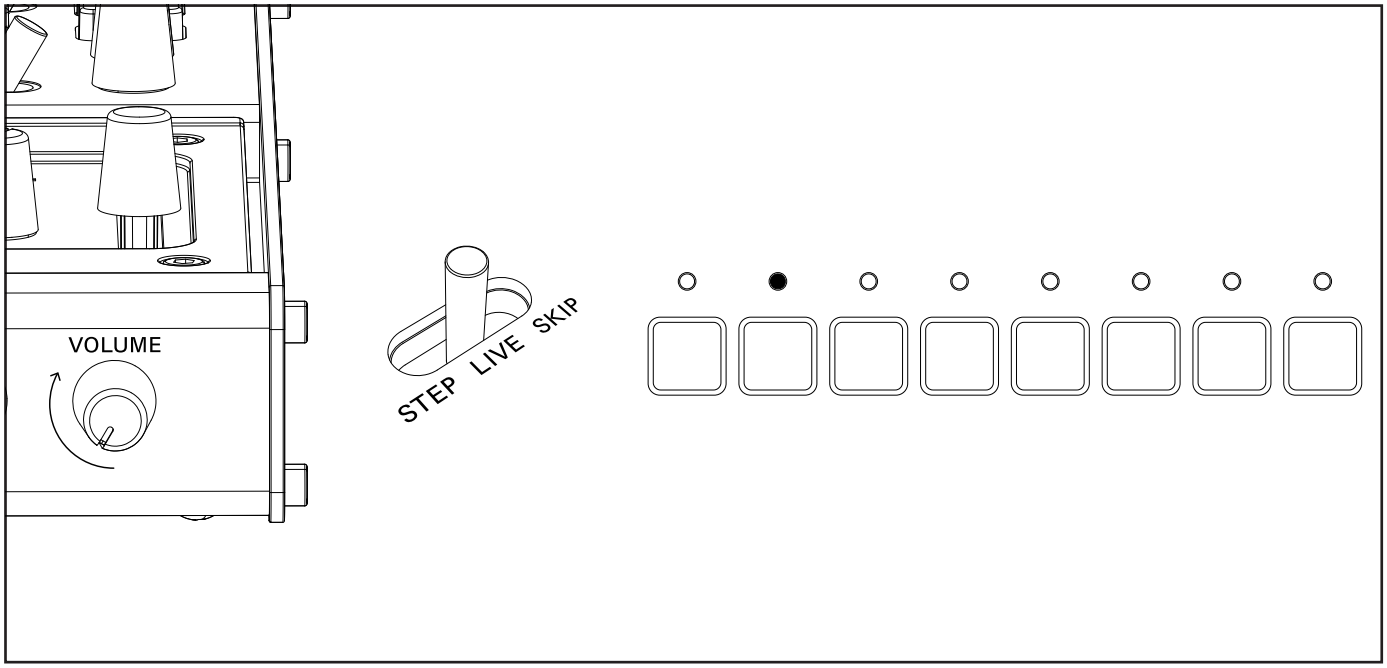

4.1 Making Sounds with KEYS

To hear sounds from phase8, ensure that the VOLUME knob on the rear panel and the VELOCITY knobs on the front panel are not turned all the way down.

To play the resonators with the keys, ensure that the STEP-LIVE-SKIP switch is set to the LIVE position.

Press any of the 8 keys to trigger sounds from the corresponding 8 resonators. Multiple keys can be pressed simultaneously.

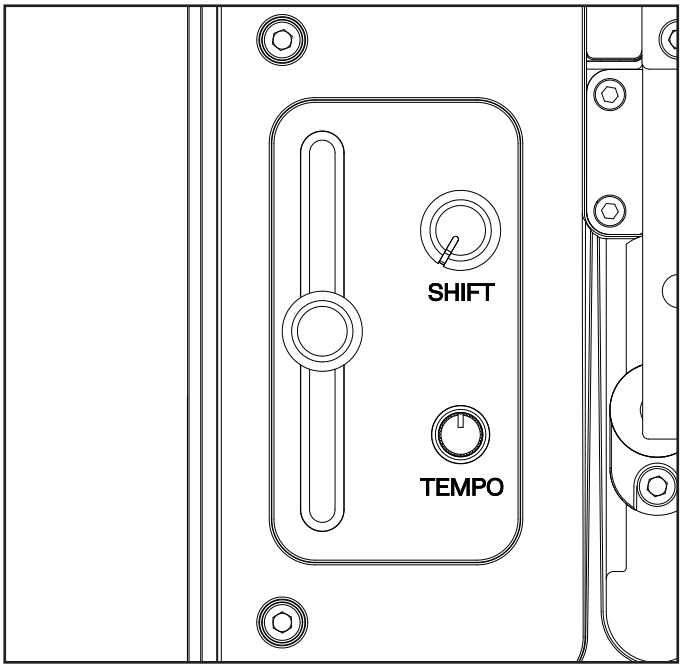

4.2 Understanding the AIR Slider

The large unlabelled AIR slider on the front panel of phase8 controls how much sound leaks out of the resonator pickups. When the AIR slider is all the way down, sound will only be heard when a note is triggered with the keys, by MIDI, or the sequencer.

When this slider is turned up, then the resonators can always be heard and played by hand.

When playing with the keys, the sequencer or by MIDI, turning the AIR slider up can add a more present, open, and less tightly controlled sound.

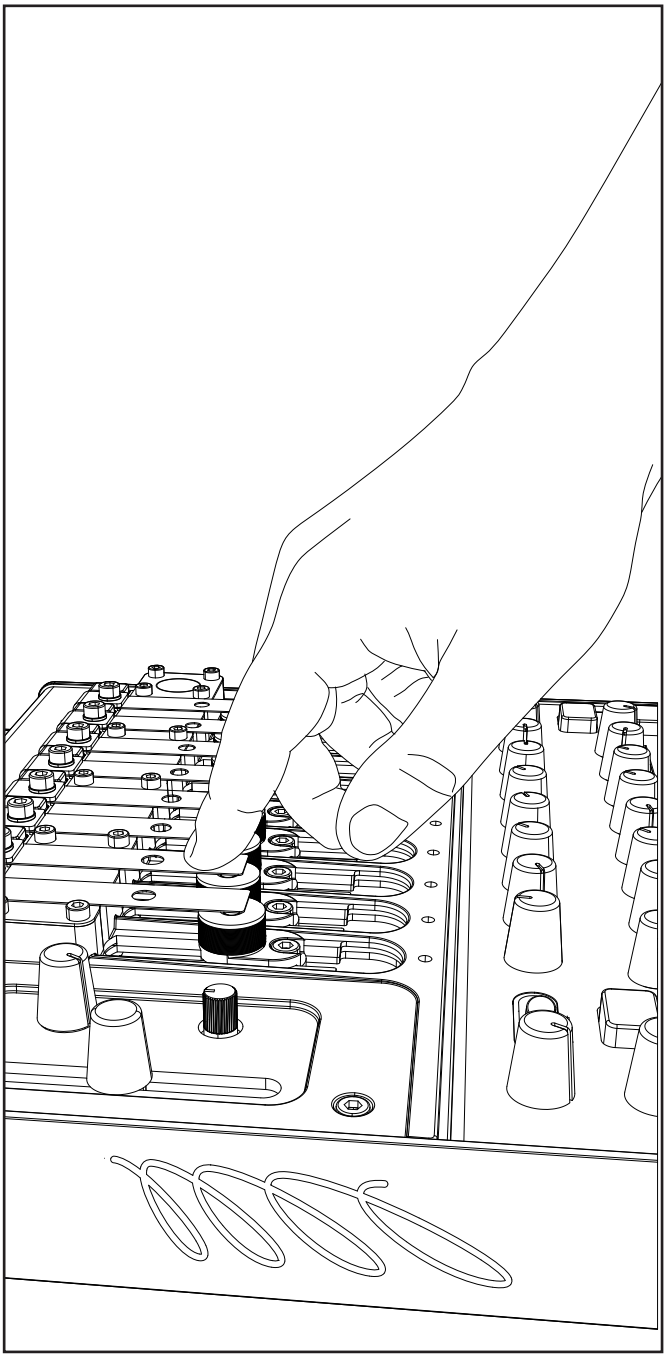

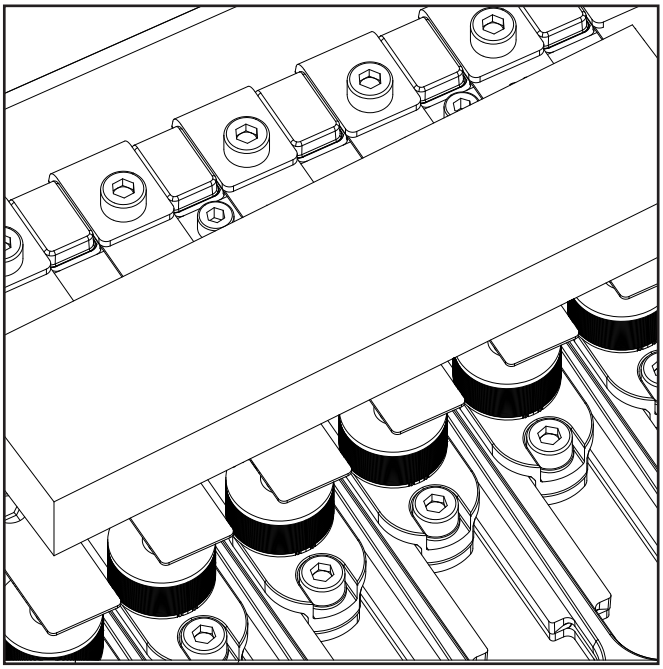

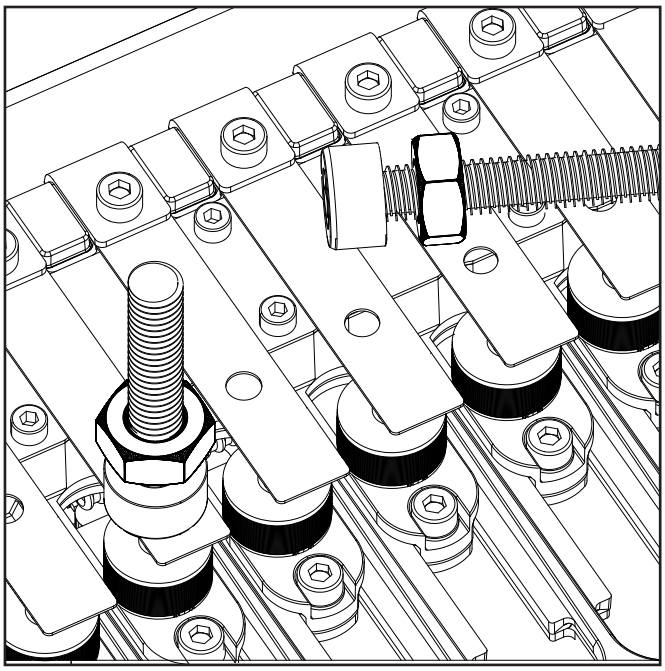

4.3 Making Sounds with Hands & Objects

HANDS

Your hands can be an integral tool to play phase8 with.

To begin, make sure the AIR slider is pushed up and then use your fingers to tap, pluck, or strum the resonators.

These interactions can be recorded into the sequence using PLUCK, which is explained further in section 5.4.

Please note: The pickups perform best when their surface is clean and free of oils or residue. Regular handling can leave a thin, invisible film that may reduce sensitivity. Keeping the pickup surface clean ensures optimal performance.

We recommend cleaning during resonator changes. Use a dry, soft cloth to wipe the pickup surface directly under the resonators. For detailed instructions on removing and reinstalling resonators, see section 7.0.

OBJECTS

Experiment with phase8's sound in real time using a variety of objects that carry different sound sculpting and sonic possibilities.

When placed over the resonators, a wood block or piece of felt can create a muting effect.

The use of metal, such as bolts, can provide texture.

Rocks can be placed on the resonators to provide irregular contact points to vary the sound.

The acoustic potential of phase8 lets the world around you inform your creations.

Please note: Be careful when using small objects to interact with the resonators. If any small objects fall into the instrument, make sure to turn off immediately and remove the object before turning back on.

Use caution when selecting objects to interact with phase8. Sharp objects may damage the instrument.

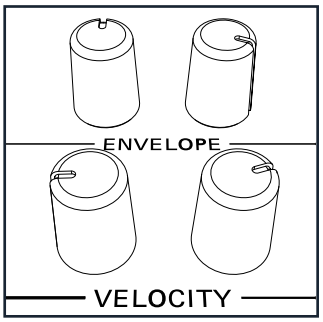

4.4 Velocity

For each resonator, use the corresponding VELOCITY knob to control the intensity of the sound (i.e. how hard it is driven and how loud it sounds). Each resonator passes through a wavefolder circuit, which will overdrive around 12 o'clock on the control, before adding harmonics at increasing intensity as the control is turned up.

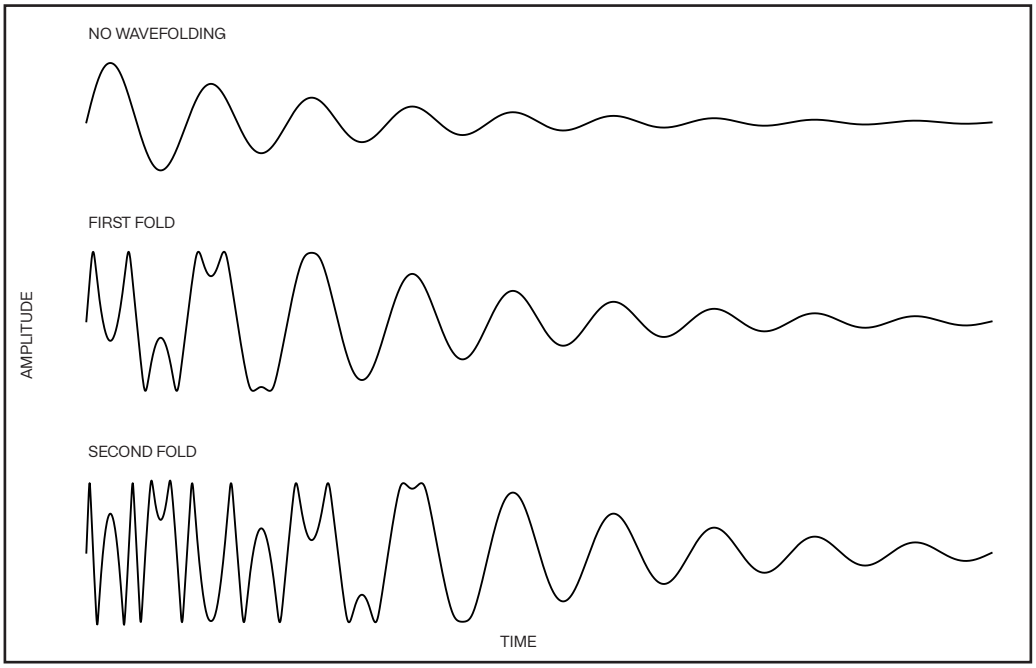

4.5 Envelope

Turning the ENVELOPE knob down makes the sound sharper and shorter; turning it up makes it smoother and longer. The table to the top right describes the behaviour of a resonator's envelope for different ENVELOPE knob settings.

KNOB POSITION	ENVELOPE DESCRIPTION
0% [anticlockwise]	Fastest Attack, Fast Decay, No Sustain
25%	Fastest Attack, Slower Decay, No Sustain
50%	Fastest Attack, Sustain, Fastest Release
75%	Slower Attack, Sustain, Slower Release
100% [clockwise]	Slowest Attack, Sustain, Slowest Release

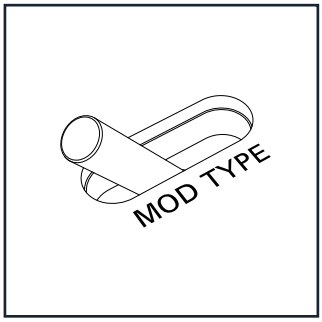

4.6 Modulation Effects

The sound of the resonators can be modulated with 1 of 3 different Amplitude Modulation (AM) effects. Each of these effects are impacted by the DEPTH and RATE knobs.

DEPTH controls how intense the effect is, and RATE controls the speed or frequency of the effect.

Use the MOD TYPE switch to choose the currently active effect. The switch position corresponds to the 3 effects as follows:

POSITION	EFFECT
Left	Tremolo
Centre	AM Pitch Envelope / Vibrato
Right	AM Polyphonic Modulation

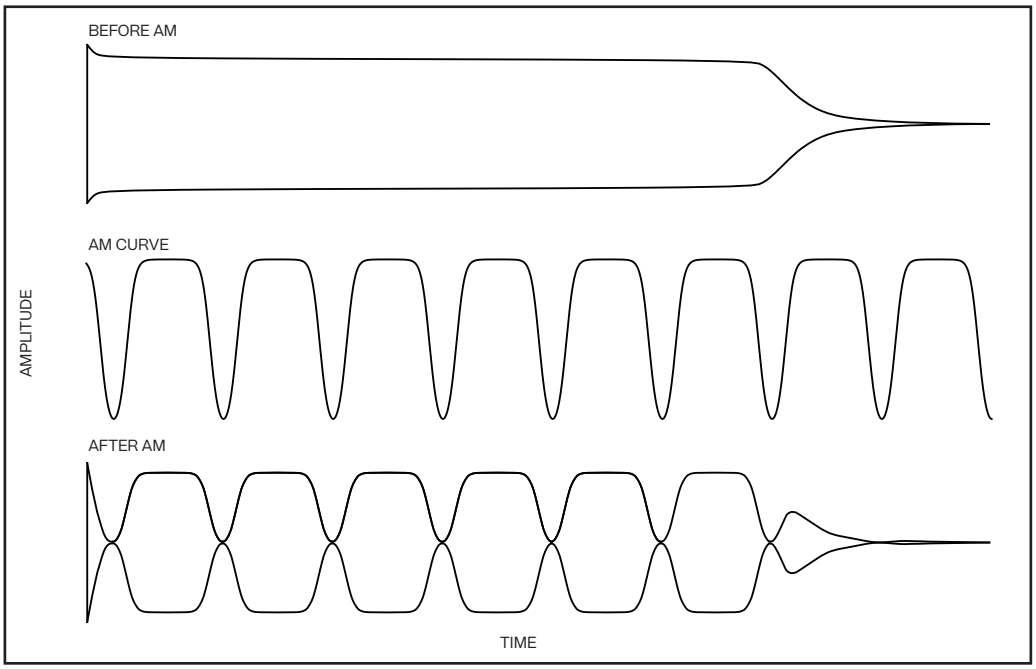

TREMOLO

Modulates the volume of the signal over time creating a trembling or shimmering effect.

AM PITCH ENVELOPE

Modulates the resonator sound with a sine wave whose frequency dives down to match the frequency of the resonator each time a note is triggered.

This effect can be optionally swapped out for an AM Vibrato effect, via the Global Parameters menu. See section 10.0 for more information on configuring Global Parameters.

AM POLYPHONIC MODULATION

Each resonator is modulated with a sine wave whose frequency is related to the frequency of the resonator, and offset / detuned by the position of the RATE knob.

If the QUANTIZE button is held while turning the RATE knob, then the modulating sine wave will be a stepped harmonic of the resonator's pitch.

5.0 Using the Sequencer

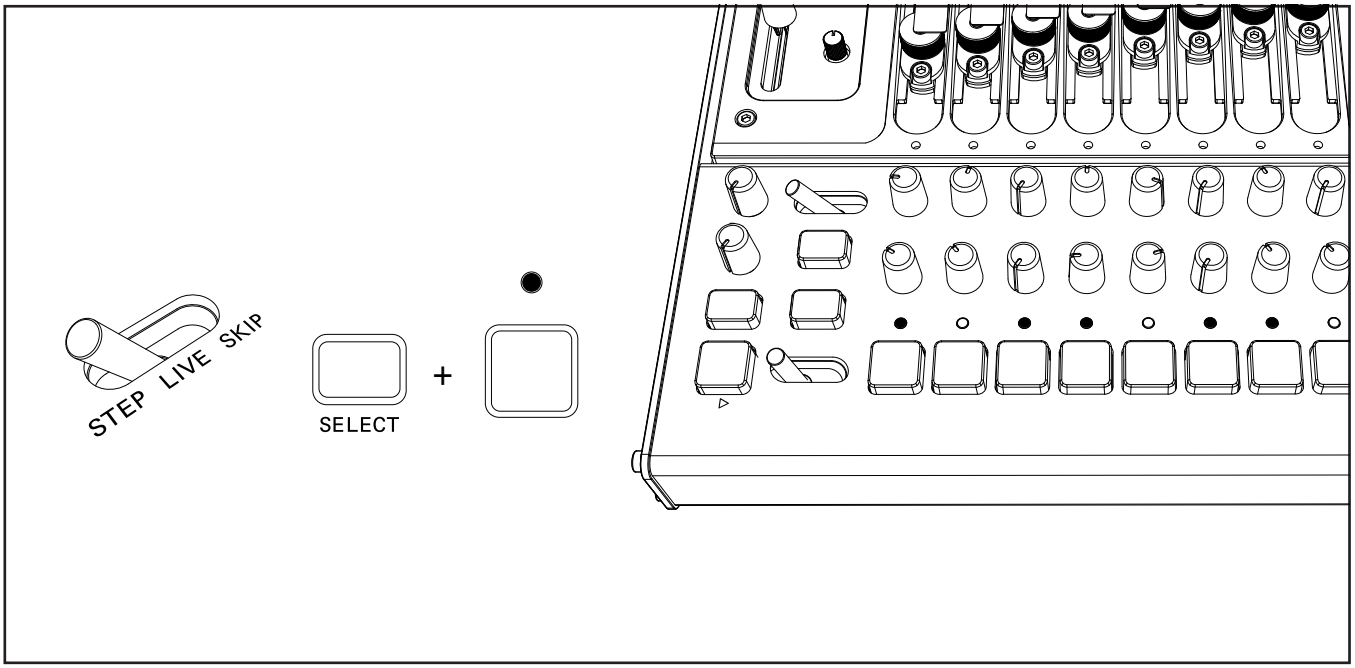

5.1 Step Sequence Programming

phase8's sequencer allows rhythm patterns to be programmed individually for each of the resonators.

To begin programming a sequence, move the STEP-LIVE-SKIP switch into the STEP position. Hold SELECT and press one of the 8 keys to begin editing the sequence for that resonator. The currently selected resonator can always be checked by holding the SELECT key and seeing which of the upper 8 LEDs lights up.

Once a resonator has been selected, press the 8 keys to insert or delete triggers in each of 8 time steps. The lower LEDs indicate which time steps contain triggers for the currently selected resonator.

Press the START button to start the sequence playing, and press it again to stop the sequence.

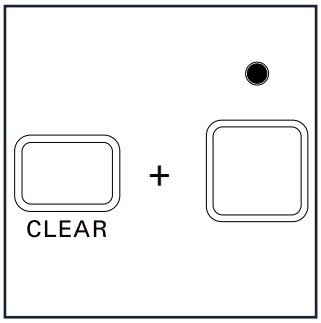

To clear all of the triggers for any voice, hold the CLEAR button and press one of the 8 keys.

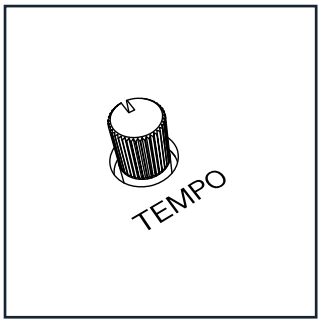

Use the TEMPO knob to control the speed of the sequence.

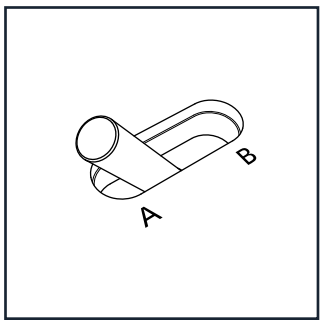

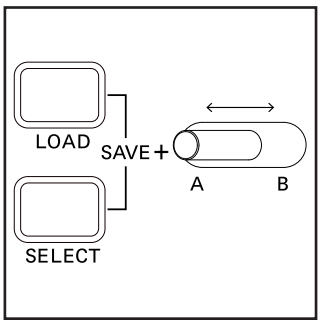

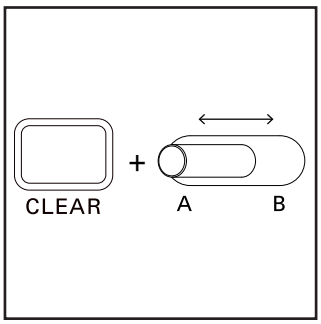

5.2 Variation Switch

The switch labelled A-B allows you to move between two separate sequences.

This can be useful for creating two different rhythmic variations on a sequence and switching between the two variations in real time.

Sequences can be copied between variation A and variation B by holding SAVE [LOAD + SELECT] and switching from A to B, or vice versa.

Holding CLEAR while switching from A to B will clear the contents of the B variation, so that you arrive in a blank sequence. Similarly, holding CLEAR while switching from B to A will clear the contents of the A variation.

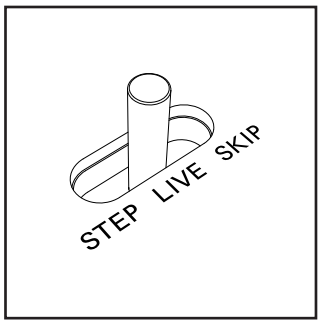

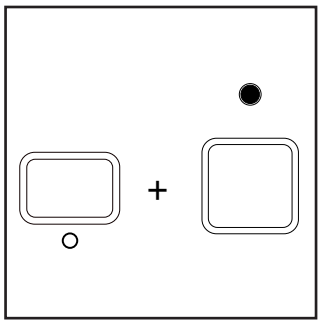

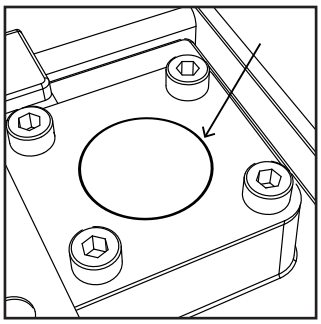

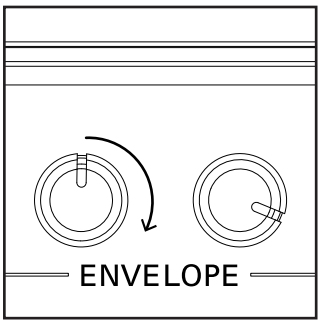

5.3 Key Record

There are also a number of ways to record triggers live into the sequence for more expressive and nuanced sequences.

Start by moving the STEP-LIVE-SKIP switch into the LIVE position.

With the sequencer started, hold the RECORD button while pressing the 8 keys to record your playing unquantized into the sequence.

5.4 Pluck Record

Triggers can be recorded into the sequence by holding PLUCK (to the right of the resonators) and directly plucking or strumming the resonators with your finger.

When a resonator's ENVELOPE control is set above 50%, the resonator will sustain when plucked, allowing it to generate drone-like sounds. The note can be ended by lightly damping the resonator with your finger to stop its motion. To achieve this muting effect, hold your finger on the resonator for more than a second.

PLUCK is an experimental function and may sometimes produce unexpected results.

5.5 Parameter Record

While the RECORD button is held down and the sequencer is running, parameter changes performed by the user are recorded.

Changes to the positions of the VELOCITY, ENVELOPE, DEPTH, RATE, TEMPO or SHIFT knobs, AIR slider or changes to the MOD TYPE switch can be recorded.

Let go of the RECORD button to stop recording – any parameters that have been modified during the recording will play back.

Move a knob while not pressing the RECORD button to return that parameter to its physical position.

Hold CLEAR and press RECORD to return all parameters to their physical positions.

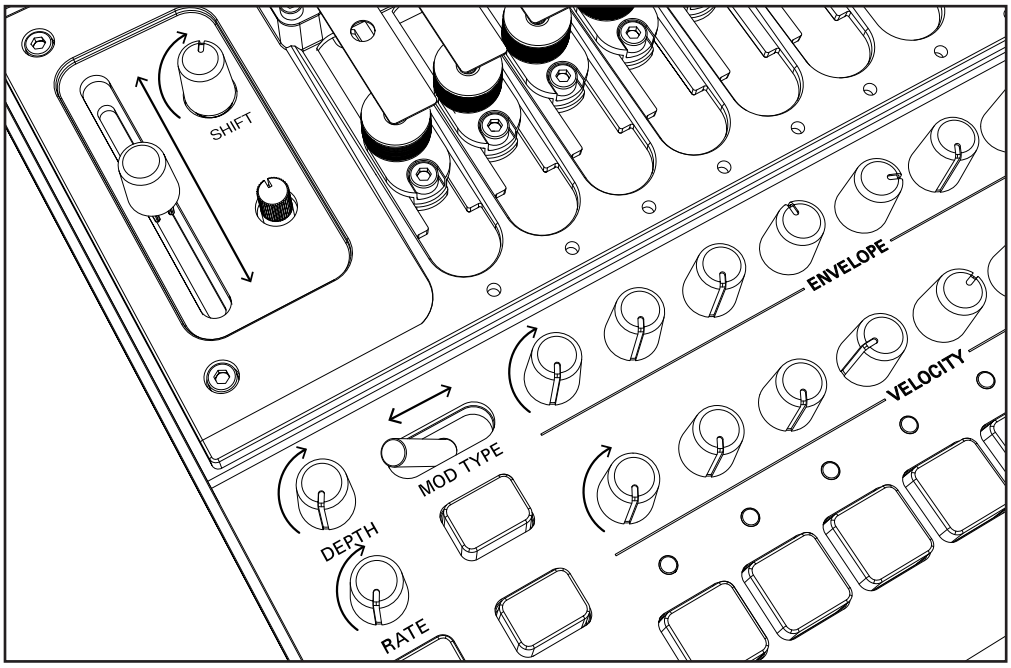

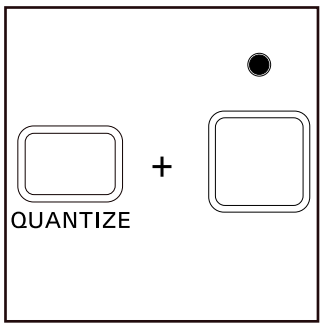

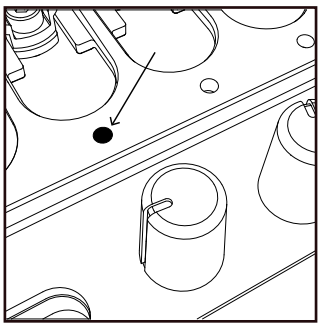

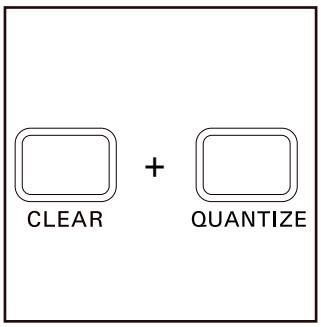

5.6 Quantize

The recorded sequence data can be quantized after recording (trigger to the nearest 16th note) for each resonator individually by holding the QUANTIZE button and pressing the 8 keys to quantize the 8 different resonator tracks.

Similarly, by repeating this action the sequences can be returned to their unquantized states.

The upper LEDs will light up to indicate which resonators are currently quantized when the QUANTIZE button is being pressed.

Hold CLEAR and press QUANTIZE in order to unquantize the sequence for every resonator at once.

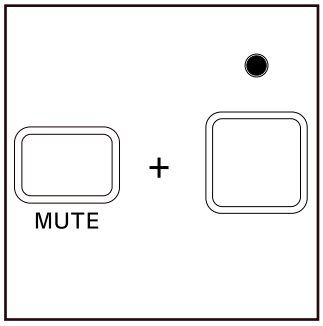

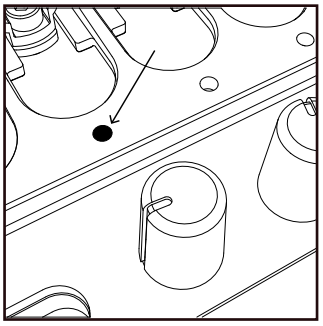

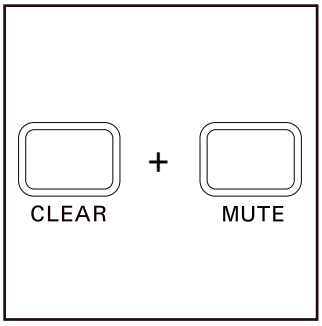

5.7 Mute

Each of the 8 resonator sequences can be temporarily muted or un-muted by holding the MUTE button and pressing the 8 keys to change the mute status for the 8 resonators.

The upper LEDs will light up to indicate which resonators are currently muted when the MUTE button is being pressed.

Please note this is a trigger mute, you can still play the KEYS in LIVE mode or with the AIR slider up.

Hold CLEAR and press MUTE in order to un-mute every resonator at once.

5.8 Shift

The SHIFT knob controls a trigger delay effect that adds an echoed note for every note played. When SHIFT is fully turned down, no echo is generated. As the knob position increases, the delay time between each note and its echoed note also increases.

The delay time is also related to the currently set TEMPO of the instrument.

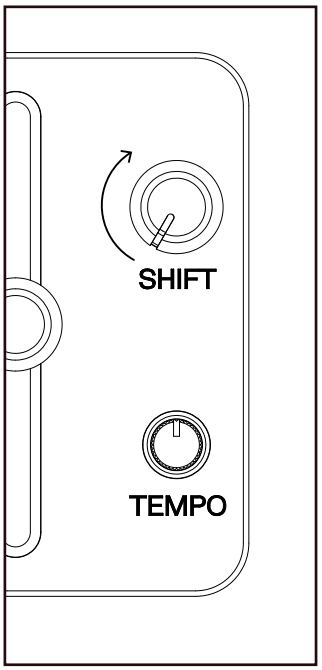

The delay time can also be set independently for each of the 8 resonators.

This can be done by holding SELECT and pressing a key to select a resonator, like with the step sequencer, and then turning SHIFT with SELECT held down to change the delay time for only the currently selected resonator.

This can be repeated for all resonators by selecting a new resonator and turning SHIFT again with SELECT held down.

Turning the SHIFT knob without holding SELECT will re-align all of the resonator delays to align with the position of the knob.

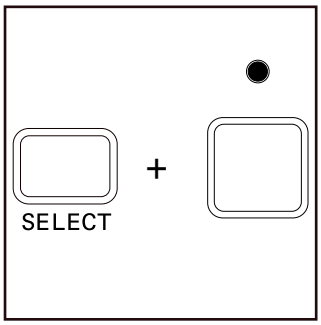

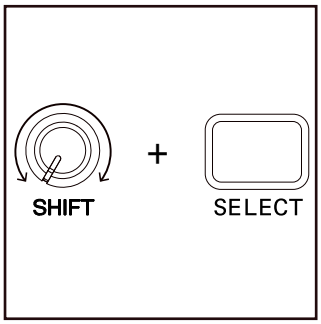

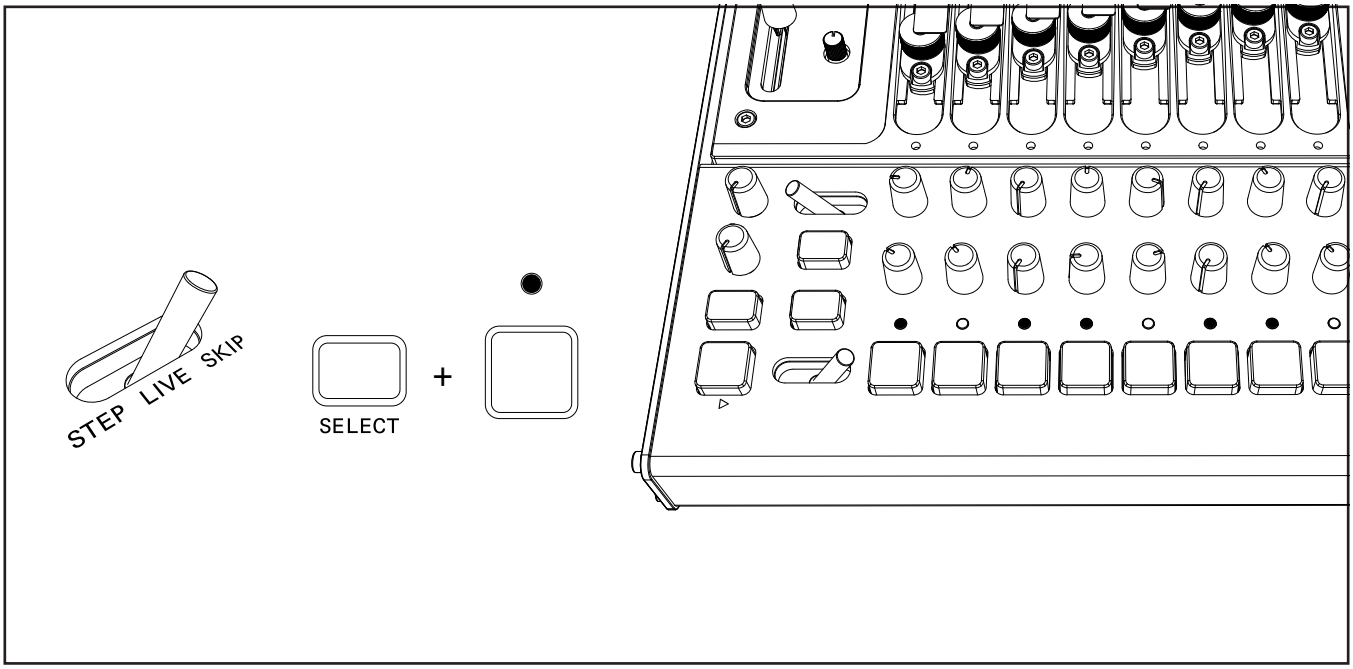

5.9 Skip

By default, the 8 resonators of phase8 share the same 8-step sequence length. However, each resonator's sequence length can be set individually from 0 to 8 steps.

Set the STEP-LIVE-SKIP switch to the SKIP position.

Just like in STEP mode, the currently selected resonator is set by holding SELECT and pressing one of the 8 keys. The lower 8 LEDs will indicate whether a time step for the selected resonator is active [ON] or skipped [OFF].

By applying different SKIP settings to different resonators, sequences with complex polymetry can be built.

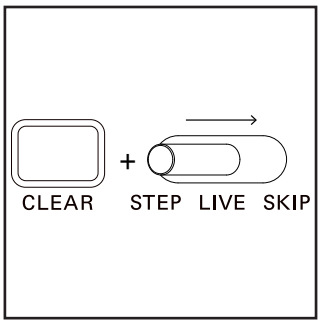

To reset the SKIP settings to default (all active, no skips) for all voices at once, hold CLEAR while moving the STEP-LIVE-SKIP switch into the SKIP position.

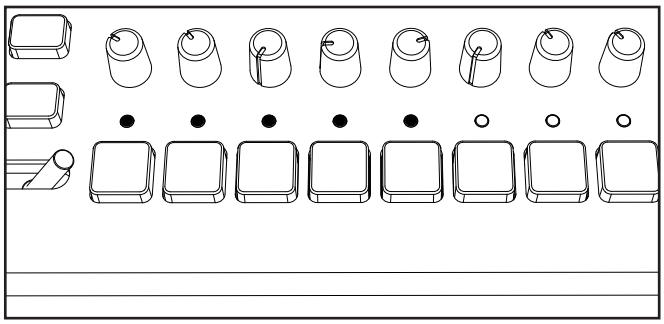

An alternate interface for setting SKIP settings is available by enabling the Skip Sequence Length Mode setting in the Global Parameters as described in section 10.0.

When Skip Sequence Length Mode is enabled, pressing a key in SKIP mode activates all steps up to and including the pressed key, and skips all subsequent steps.

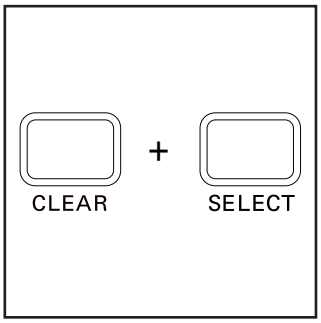

5.10 Clear All

To clear all STEPS and restore all SKIPS to default, press CLEAR and SELECT at the same time.

An accidental Clear All can be undone by pressing CLEAR and SELECT again, before any changes have been made to the sequence.

6.0 Saving & Loading

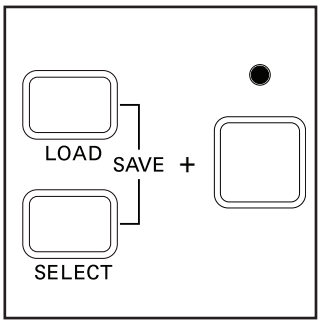

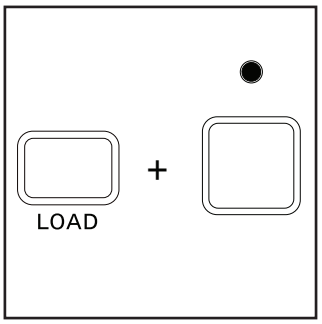

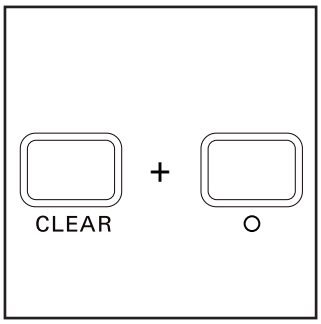

6.1 Saving a Program

The current sequence and most of the current parameter (knob) settings can be saved to one of 8 available slots by holding SAVE (LOAD + SELECT) and pressing one of the 8 keys, corresponding to the desired slot.

This includes both the A and B patterns.

6.2 Loading a Program

To load a previously saved program from one of the 8 slots, hold the LOAD button and press one of the 8 keys corresponding to the desired slot to load from it. Bear in mind that this will overwrite the currently active sequence settings unless they have been saved to a slot themselves.

It is possible to clear all of the parameter settings from the loaded program and return all parameters to their live knob positions (i.e. perform a panel read) by holding CLEAR and pressing RECORD.

6.3 Program Content

The following data is saved in a program:

- Sequencer data (STEP) for variations A + B
- Sequencer data (SKIP)
- MUTE settings
- QUANTIZE setting
- SHIFT, AIR, DEPTH, RATE, MOD TYPE, VELOCITY, ENVELOPE settings, and any recorded movements within those parameters that are playing when the program is saved.

Note that the TEMPO setting is not saved and different programs can be loaded in real time using LOAD without disrupting the sequencer's flow.

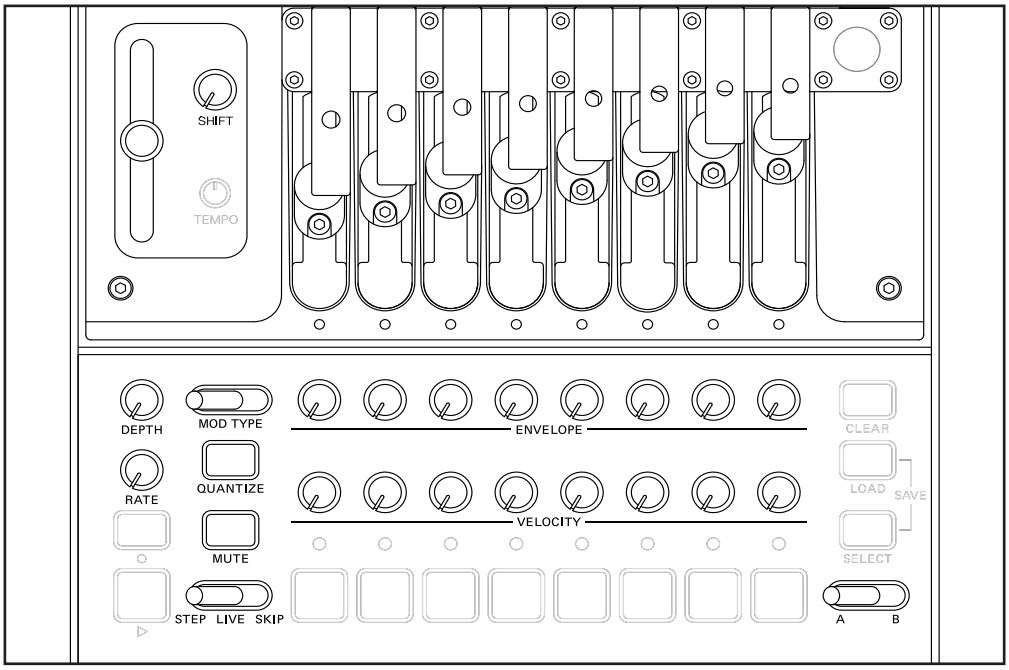

7.0 Resonators

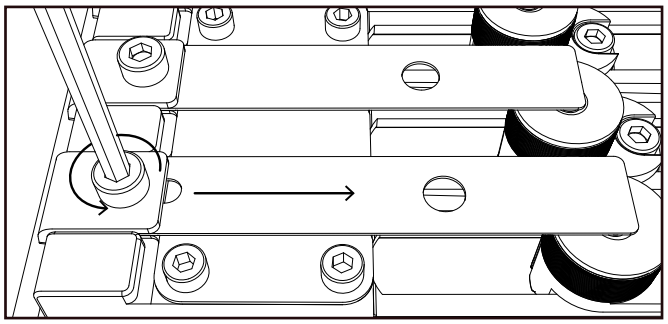

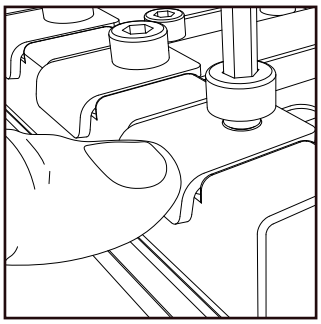

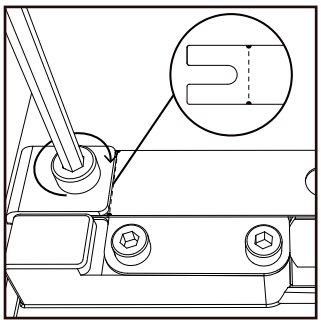

7.1 Swapping Resonators

Your phase8 comes with 13 resonators, any 8 of which can be installed on the instrument.

UNINSTALLING A RESONATOR

To customize the scale to your liking, swap the resonators by carefully following the instructions in this section.

To swap a resonator, turn off your phase8 and loosen the stabiliser screw on any resonator using the 2.5 mm hex key and slide out the installed resonator.

Once removed, make sure the pickup surface underneath is free of dust and debris.

Please note: 1/2 turn the stabiliser screw to pull out the resonator. Full screw removal isn't necessary.

INSTALLING A RESONATOR

To install a new resonator, use your finger to push the rear of the stabiliser and slide your new resonator into the opening. When doing so make sure the semi-circular markings on the resonator are roughly flush with the edge of the stabiliser to return to a good starting point.

Lightly tighten the screw a 1/2 turn until the resonator stays in place.

Please note: Overtightening screws on this instrument may cause damage. Please ensure you only tighten a screw until parts are gently held.

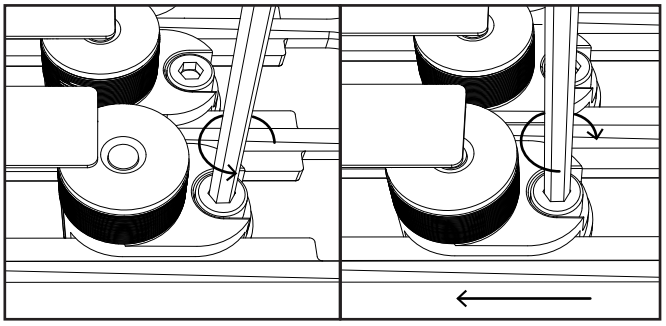

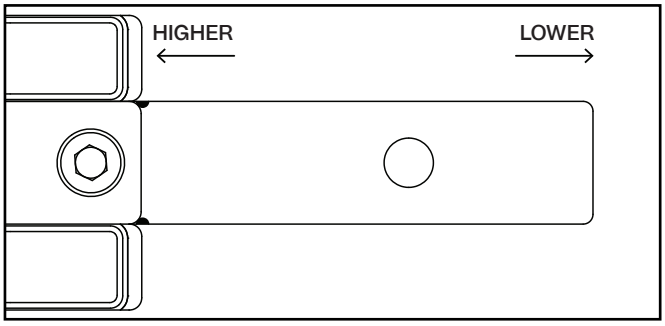

ADJUSTING THE DRIVER

If your new resonator is a different length to the previous one, or if you would like to alter the "hit" point on the resonator, you will need to adjust the position of the driver.

1/2 turn to loosen the screw with the 2.5 mm hex key and slide the driver under the corner of the resonator.

Lightly tighten the screw a 1/2 turn until the driver stays in place.

Please note: Overtightening screws on this instrument may cause damage. Please ensure you only tighten a screw until parts are gently held.

7.2 Tuning & Calibration

Tuning can be done directly after adding in a new resonator, changing a resonator's position, or when you want to give your instrument a tune-up.

As a general rule, by moving the resonator in or out to change its length, you adjust the pitch: longer resonators have a lower pitch, and shorter resonators have a higher pitch.

Once you have moved the resonator and tightened the stabiliser screw, turn on the instrument and press the corresponding key or pluck the resonator to check the sound. Either tune by ear or using a favourite tuner.

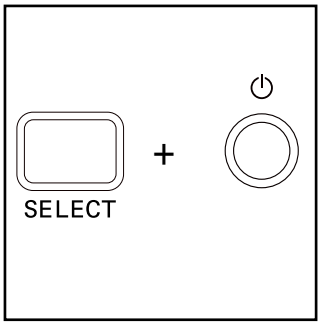

CALIBRATION

Whenever you have made changes to the resonators, we recommend you calibrate your unit.

With your instrument turned on hold SELECT and push the power button to calibrate phase8 to your new scale.

8.0 MIDI

8.1 MIDI Control: Device

MIDI OUT

If you want to use phase8's keys, knobs, and sequencer to play sounds on or to control an external MIDI tone generator, connect phase8's MIDI OUT connector to the external MIDI tone generator's MIDI IN connector using a MIDI cable.

MIDI IN

If you want to play or control phase8 from another MIDI keyboard, sequencer, or other device, connect the MIDI OUT connector of the external MIDI device to phase8's MIDI IN connector with a MIDI cable.

8.2 MIDI Control: Computer

USB-MIDI CONNECTION

phase8 can be connected to a computer or to any other USB host device via the USB-C connector on the rear panel.

phase8 will appear as a USB-MIDI device in your DAW or any MIDI-compatible application. It can also be used to control software instruments, VSTs, or other MIDI-capable equipment.

8.3 MIDI Settings

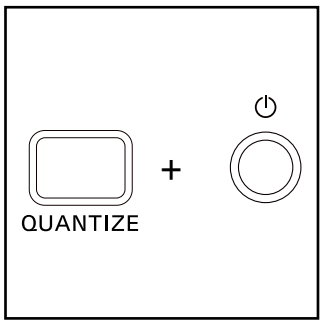

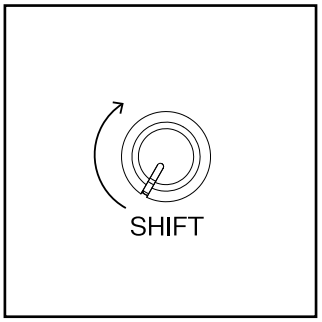

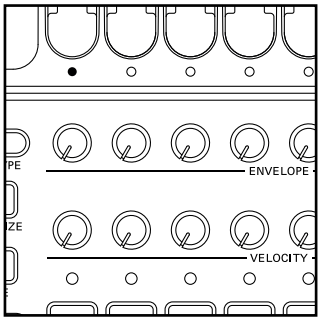

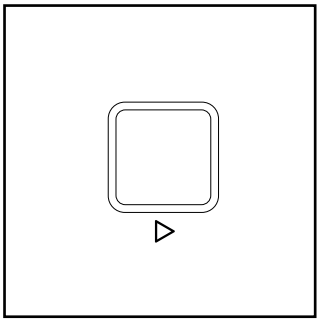

CHANNEL

To exchange data with an external MIDI device, set phase8 to the same MIDI channel as the external MIDI device.

Set the MIDI channel for phase8 by holding the QUANTIZE button while powering on phase8.

Use the SHIFT knob to cycle between the 16 possible channel settings. The upper and lower LEDs will light to show which channel is currently selected.

The upper LEDs are mapped to channels 1-8, while the lower LEDs are mapped to channels 9-16.

Once the MIDI channel has been selected, press START to save the selection and continue booting phase8.

LOCAL OFF

This setting optionally disables the connection between the local controls (buttons, switches, knobs) on phase8 and the resonator sound generation.

When "Local Off" is enabled, playing with the 8 keys, turning knobs and playing the sequencer will result in MIDI data being transmitted, but no audio events will be triggered locally. In this mode, VELOCITY, ENVELOPE, DEPTH, RATE, and AIR controls will have no local effect, and will only cause Control Change MIDI messages to be transmitted.

MIDI Note events can still be sent to phase8 in order to trigger audio events, and MIDI Control Change messages can be sent to control the VELOCITY, ENVELOPE, DEPTH, RATE, and AIR controls.

When Local Off is enabled, the TEMPO and SHIFT controls are still locally active, and change the tempo and trigger delay applied to outgoing MIDI Notes.

For example, this can be useful if you would like to trigger external gear (i.e. a synthesizer or drum machine) using phase8 controls and sequencer while triggering phase8's sounds using an external MIDI controller.

This setting can be configured in the Global Parameters menu, as described in section 10.0.

8.4 MIDI Note Assignment

RESONATOR	MIDI NOTE
1 (LEFT)	C2 (36)
2	C#2 (37)
3	D2 (38)
4	Eb2 (39)
5	E2 (40)
6	F2 (41)
7	F#2 (42)
8 (RIGHT)	G2 (43)

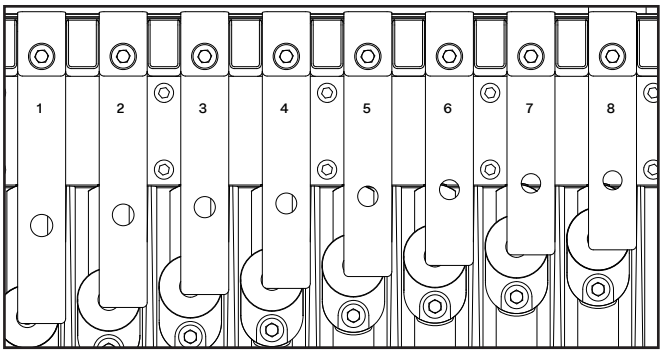

phase8 differs from many MIDI-controllable synthesizers in that its pitch is determined by 8 physical resonators.

The Global Parameter "MIDI Note Assignment" defines which MIDI notes are assigned to the 8 resonators.

STATIC

In this setting, MIDI notes listed in the above table are always assigned to the 8 resonators, regardless of the true pitch of the physically installed resonators.

This setting is useful if you would like the MIDI note assignment to stay the same regardless of what combination of resonators is physically installed.

Note that this table assumes that C4 is Middle C (MIDI Note 60), as is most often the case.

In some synthesizers or DAWs, such as Ableton Live, Middle C is described as C3, so the default notes that can control the phase8 will appear instead as C1 - G1.

FREQUENCY BASED

In this mode, MIDI notes are set automatically to match the pitch of the installed resonators. The note assignment happens during calibration, which by default runs each time phase8 is powered on. This is useful for sending MIDI from phase8 to other instruments so they play in tune with it.

MIDI TRANSPOSE

This setting can be used to transpose the MIDI notes up by two octaves (i.e. C4 - G4).

8.5 MIDI Filter Settings

The Global Parameters menu contains various settings for optionally disabling transmission and reception of specific types of MIDI messages i.e. Transport / Control Change / Program Change / Timing Clock.

9.0 Synchronising

TRS-MIDI CLOCK IGNORE	USB-MIDI CLOCK IGNORE	BEHAVIOUR
Off	Off	If both USB-MIDI and MIDI clock is present, USB-MIDI clock is followed.
On	Off	If USB-MIDI clock is present, it is followed.
Off	On	If MIDI clock is present at MIDI IN, it is followed.
On	On	USB-MIDI and MIDI clocks are ignored.

9.1 phase8 Sequencer

phase8's sequencer can be synchronised to 4 different kinds of clock source: internal clock, MIDI clock, USB-MIDI clock and SYNC clock.

If multiple viable clock sources are present at the same time, then phase8 will choose the clock source to synchronise to based on the TRS-MIDI Clock Ignore and USB-MIDI Clock Ignore setting in Global Parameters as indicated in the above table.

Regardless of Global Parameter settings, the sequencer will follow the clock at the SYNC IN port if a cable is inserted into the SYNC IN jack.

The clock received and transmitted at the SYNC IN and SYNC OUT ports respectively can have different resolution settings (PPQN - Pulses Per Quarter Note) depending on how the relevant Global Parameters are configured. The default is 2PPQN, which is the same default used in the SYNC ports for other KORG devices like those from the volca and logue series'.

2PPQN means 2 pulses for every beat, or 8 pulses for every loop of a sequence. 4PPQN means 4 pulses for every beat, or 16 pulses for every loop of a sequence.

Please note: phase8 does not support 24PPQN or 48PPQN as used in some older DIN-SYNC compatible devices.

9.2 Devices to phase8

phase8 outputs can synchronise external devices via its MIDI OUT, USB-MIDI and SYNC OUT ports.

MIDI Timing Clock messages are transmitted on both USB-MIDI and TRS-MIDI outputs unless the Global Parameter setting MIDI Timing Clock TX is set to disable.

A clock signal is always transmitted at the SYNC OUT output. This clock signal can have a PPQN resolution of 2PPQN or 4PPQN, depending on the Global Parameter settings.

The clock can also have a rising or falling polarity, depending on the relevant Global Parameter settings.

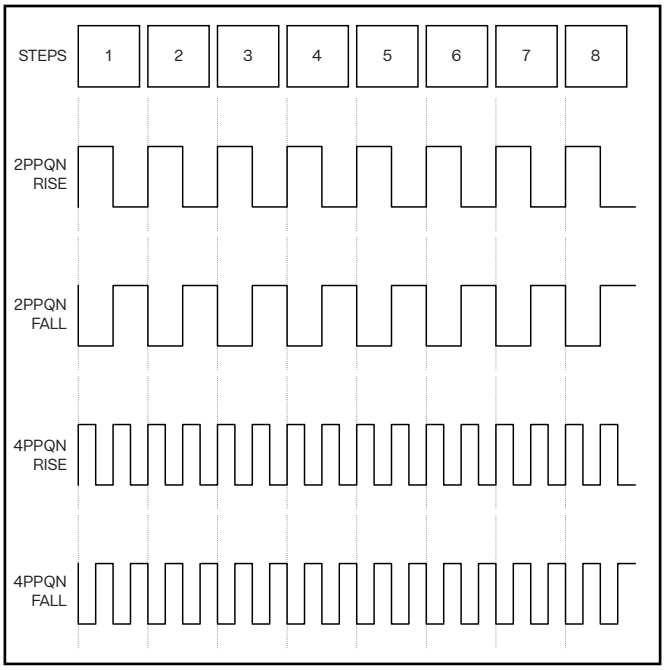

10.0 Global Parameter Settings

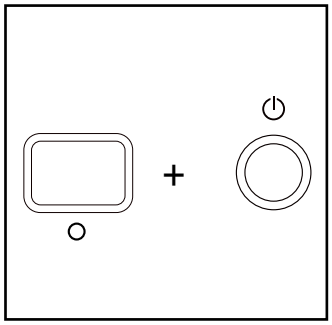

10.1 Global Parameters Table

Many of phase8's settings can be changed in the Global Parameter menus.

There are a few different menus that can be called up when booting the instrument in order to change the settings.

MAIN MENU

Access this menu by holding RECORD and turning on the device. There are 3 pages in this menu, and each page is accessed by setting the MOD TYPE switch to a different position. Within each menu, each of the settings is represented by an LED as per the below table. Use the 8 keys to toggle the various settings. When happy with the settings, press START to continue into normal instrument mode.

INDEX	PARAMETER	POSSIBLE VALUES	MENU	
			SUB-MENU	BUTTON
0	Skip Sequence Length Mode Enable	[0,1] [Disable, Enable]	Mod Type: Left Position	Key 1
1	Mod Type 2	[0,1] [Pitch Env, Vibrato]		Key 2
2	Skip Calibration on Power On	[0,1] [Disable, Enable]		Key 3
3	Electromagnetic Feedback Sustain	[0,1] [Enable, Disable]		Key 4
4	Sync In PPQN	[0,1] [2, 4]		Key 5
5	Sync Out PPQN	[0,1] [2, 4]		Key 6
6	Sync In Polarity: Rise or Fall	[0,1] [Rise, Fall]		Key 7
7	Sync Out Polarity: Rise or Fall	[0,1] [Rise, Fall]		Key 8
8	MIDI Note Assignment	[0,1] [Static, Frequency Based]	Mod Type: Middle Position	Key 1
9	MIDI Route	[0,1] [USB+MIDI][USB]		Key 2
10	MIDI Transport RX	[0,1] [Enable, Disable]		Key 3
11	MIDI Transport TX	[0,1] [Enable, Disable]		Key 4
12	MIDI CC RX	[0,1] [Enable, Disable]		Key 5
13	MIDI CC TX	[0,1] [Enable, Disable]		Key 6
14	MIDI Prog Change RX	[0,1] [Enable, Disable]		Key 7
15	MIDI Prog Change TX	[0,1] [Enable, Disable]		Key 8
16	MIDI Timing Clock TX	[0,1] [Enable, Disable]	Mod Type: Right Position	Key 1
17	Tempo range	[0,1] [Default, Slow]		Key 2
18	Local Off	[0,1] [Enable, Disable]		Key 3
19	Auto Power Off	[0,1] [Enable, Disable]		Key 4
20	MIDI Transpose + 2octave	[0,1] [Disable, Enable]		Key 5
21	Pluck Mode	[0,1] [Enable, Disable]		Key 6
22	TRS-MIDI Clock Ignore	[0,1] [Disable, Enable]		Key 7
23	USB-MIDI Clock Ignore	[0,1] [Disable, Enable]		Key 8

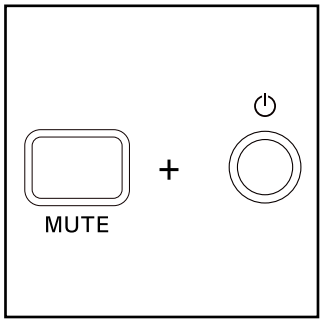

CV ROUTE MENU

By connecting a voltage signal to the TS minijack on the rear panel of the instrument labelled CV IN, the different parameters of the instrument can be modulated.

In order to choose which parameter is currently under the control of CV, boot into the CV route menu by holding down the MUTE button and turning on the instrument.

Turn a knob or press one of the keys (as shown in the menu) to choose a parameter. When happy with the selected parameter, press START to continue booting the instrument into normal mode.

MIDI CHANNEL MENU

The usage of this menu is described previously in the 8.0 MIDI section.

PARAMETER TO ROUTE	HOW TO CHOOSE IT	WHAT IT DOES
Master Amplitude	Press Key 1	Use CV to control global amplitude.
Envelope (Global)	Press Key 2	Override per-voice Envelope knob controls and control all simultaneously over CV.
Velocity (Global)	Press Key 3	Override per-voice Velocity knob controls and control all simultaneously over CV.
Air (Slider)	Turn the knob you want to route CV to.	Modulate individual knob controls with CV.
Shift		
Depth		
Rate		
Envelope 1 - 8		
Velocity 1 - 8		

11.0 End of Life: Recycling

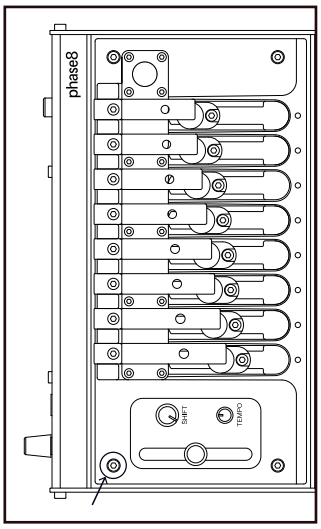

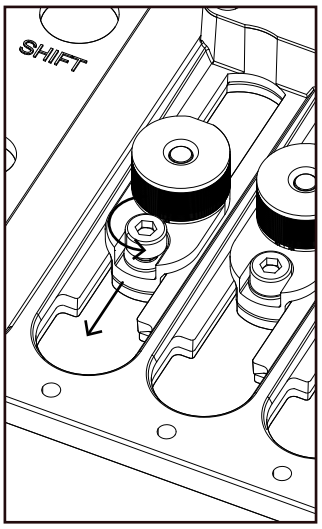

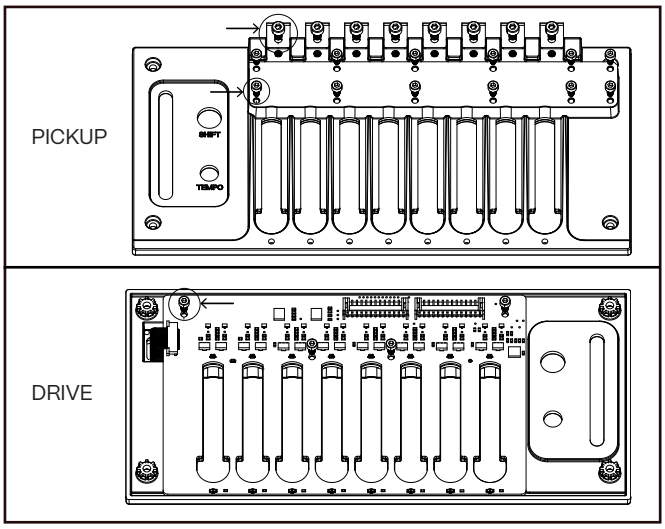

11.1 Electronics Recycling

If phase8 is no longer usable, recycle it responsibly to recover materials and reduce contamination. PCBs require separate processing and should be removed; this guide focuses on their safe removal.

Use a 2.5 mm hex key to loosen the 4 screws securing the Acoustic Frame. Lift the frame, then disconnect its ribbon cable from the Main PCB to free it.

DRIVER REMOVAL

Coil assemblies should be removed as the ferrite inside can contaminate recycling streams. This will also allow you to access the other PCBs on the Acoustic Frame. 1/2 turn the driver screw with a 2.5 mm hex key and slide the drivers out to completely remove them at the base of the Acoustic Frame.

PICKUP PCB REMOVAL

With the 2.0 mm hex key, remove the 12 screws on the Pickup PCB followed by a 2.5 mm hex key to remove the stabilisers and stabiliser screws.

DRIVE PCB REMOVAL

Flipping the Acoustic Frame over, use your 2.5 mm hex key to completely remove the 4 screws securing the Drive PCB.

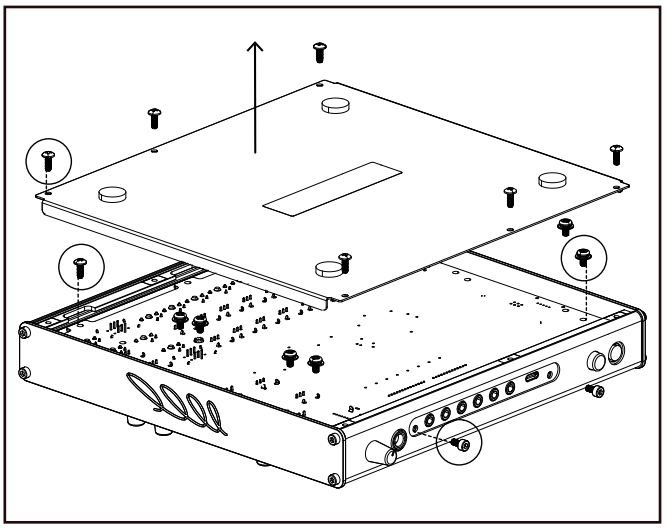

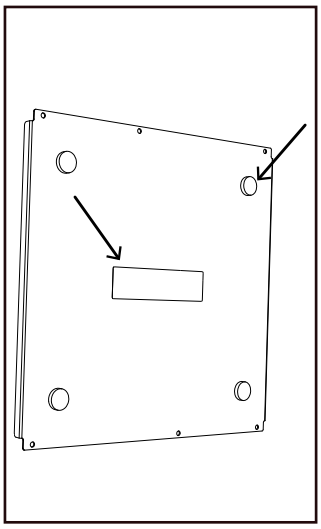

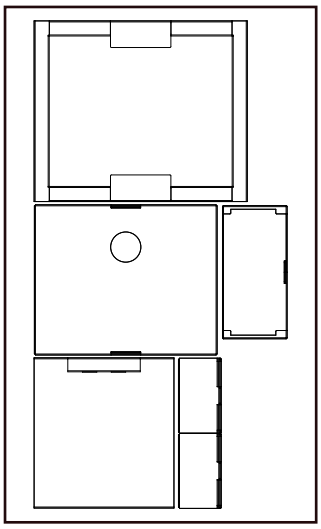

MAIN PCB REMOVAL

Flip phase8 upside down and use a PH2 screwdriver to remove the six screws securing the bottom panel, then lift it off. With the same screwdriver, remove the eleven screws securing the PCB assembly. Using a 2.5 mm hex key, remove the two rear panel screws located on the back panel, one on each side of the main connectivity ports. The PCB assembly should then lift up from the main body of the instrument.

ADHESIVES REMOVAL

Using a sharp-edged tool, remove the foam feet and product sticker from the bottom panel, as these materials can contaminate the recycling stream.

11.2 Cardboard Recycling

phase8's packaging design championed cardboard and paper products for ease of re-cycling. To prepare for recycling, simply remove any adhesive materials or staples on the box.

12.0 MIDI Implementation Chart

[ACOUSTIC SYNTHESIZER]
Model: phase8

MIDI Implementation Chart

Date: 2025. 11. 20
Version: 1.00

Function...		Transmitted	Recognized	Remarks
Basic Channel	Default Changed	1 - 16 1 - 16	1 - 16 1 - 16	Memorized
Mode	Default Messages Altered	X X **********	3 X	
Note Number	 True voice	36 - 43 **********	36 - 43 36 - 43	*1
Velocity	Note On Note Off	O 9n,V=1 - 127 X 8n,V=64	O 9n,V=1 - 127 X	
After Touch	Key's Channel	X X	X X	
Pitch Bend		X	X	
Control Change	12–19 20–27 28 29 30 31 90 92 120 121	O O O O O O O O X X	O O O O O O O O O O	Velocity (Knob) (1-8) *2 Envelope (Knob) (1-8) *2 Mod Depth *2 Mod Rate *2 Air (Slider) *2 Tempo (Internal) *2 Shift *2 Mod Type *2 All Sound Off *2 Reset All Controllers *2
Program Change	 True Number	O 0 - 7 **********	O 0 - 7 0 - 7	*3
System Exclusive		O	O	*4
System Common	Song Position Song Select Tune Request	X X X	O X X	
System Real Time	Clock Commands	O O	O O	*5 *6
Aux Messages	Local On/Off All Notes Off Active Sensing System Reset	X X O X	O O 123 - 127 O X	

Notes
*1: The values are true when Global: MIDI Note Assignment is set to "Static". If the parameter is set to "Frequency Based", the values are determined by installed resonators.
In addition, when Global:MIDI Transpose +2 octave is set to "Enable", and Global: MIDI Note Assignment is set to "Static", the values will be two octaves higher (i.e. 60 - 67).
*2: Transmitted/received when Global: MIDI CC TX /MIDI CC RX is set to "Enable".
*3: Transmitted/received when Global: MIDI Prog Change TX/MIDI Prog Change RX is set to "Enable".
*4: Korg exclusive messages and Inquiry are supported.
*5: When Global: USB-MIDI Clock Ignore and/or TRS-MIDI Clock Ignore is set to "Enable", clock may be ignored on the relevant interface(s).
When MIDI Timing Clock TX is set to "Disable", MIDI Clock is not transmitted over any MIDI interface.
*6: Transmitted/received when Global:MIDI Transport TX/MIDI Transport RX is set to "Enable".

Mode 1: Omni On, Poly
Mode 2: Omni On, Mono
Mode 3: Omni Off, Poly
Mode 4: Omni Off, Mono

O: Yes
X: No

13.0 Third-Party Licenses

13.1 Disclaimer

The software embedded within phase8 incorporates the following third-party software packages.

13.2 PFFFT (Pretty Fast FFT)

Copyright (c) 2013 Julien Pommier (pommier@modartt.com)

Based on original fortran 77 code from FFTPACKv4 from NETLIB (http://www.netlib.org/fftpack), authored by Dr Paul Swarztrauber of NCAR, in 1985.

As confirmed by the NCAR fftpack software curators, the following FFTPACKv5 license applies to FFTPACKv4 sources.

My changes are released under the same terms. FFTPACK license: http://www.cisl.ucar.edu/css/software/fftpack5/ftpk.html Copyright (c) 2004 the University Corporation for Atmospheric Research ("UCAR"). All rights reserved. Developed by NCAR's Computational and Information Systems Laboratory, UCAR, www.cisl.ucar.edu.

Redistribution and use of the Software in source and binary forms, with or without modification, is permitted provided that the following conditions are met:

Neither the names of NCAR's Computational and Information Systems Laboratory, the University Corporation for Atmospheric Research, nor the names of its sponsors or contributors may be used to endorse or promote products derived from this Software without specific prior written permission.

Redistributions of source code must retain the above copyright notices, this list of conditions, and the disclaimer below.

Redistributions in binary form must reproduce the above copyright notice, this list of conditions, and the disclaimer below in the documentation and/or other materials provided with the distribution.

THIS SOFTWARE IS PROVIDED "AS IS", WITHOUT WARRANTY OF ANY KIND, EXPRESS OR IMPLIED, INCLUDING, BUT NOT LIMITED TO THE WARRANTIES OF MERCHANTABILITY, FITNESS FOR A PARTICULAR PURPOSE AND NONINFRINGEMENT. IN NO EVENT SHALL THE CONTRIBUTORS OR COPYRIGHT HOLDERS BE LIABLE FOR ANY CLAIM, INDIRECT, INCIDENTAL, SPECIAL, EXEMPLARY, OR CONSEQUENTIAL DAMAGES OR OTHER LIABILITY, WHETHER IN AN ACTION OF CONTRACT, TORT OR OTHERWISE, ARISING FROM, OUT OF OR IN CONNECTION WITH THE SOFTWARE OR THE USE OR OTHER DEALINGS WITH THE SOFTWARE.